DocuSign Envelope ID: BEF9B9C9-CDF8-497D-8D3A-C79544B16B6B

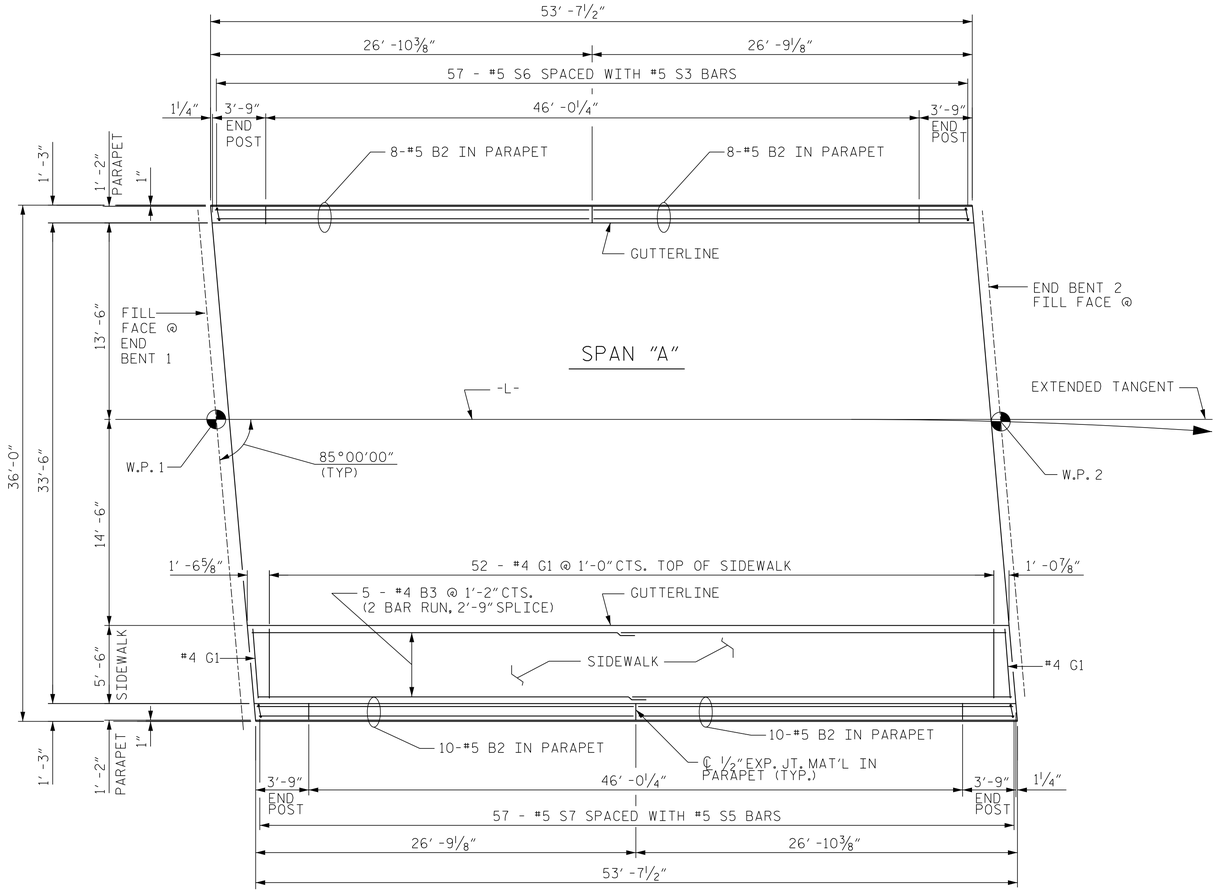

PLAN OF CONCRETE PARAPET & SIDEWALK

NOTE: DIMENSIONS ARE MEASURED ALONG BACK OF PARAPET

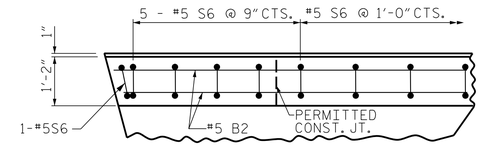

PLAN OF PARAPET

#5 S6 TO MATCH #5 S3

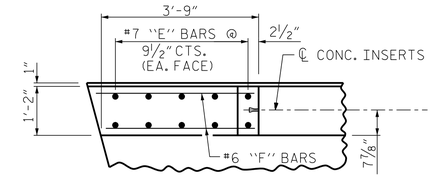

PLAN OF END POST

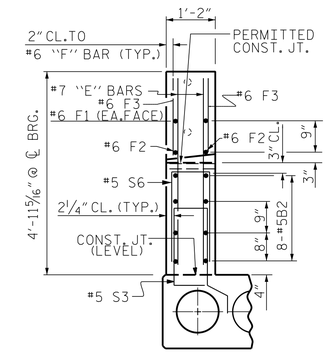

END VIEW

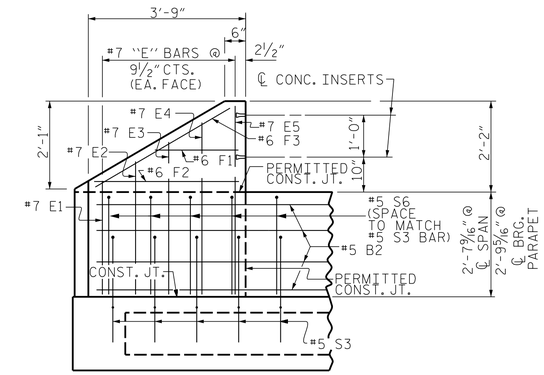

ELEVATION

LEFT SIDE

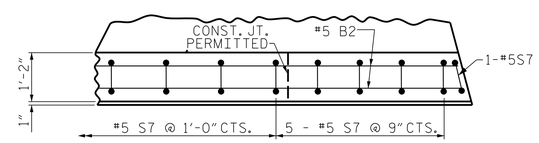

PLAN OF PARAPET

#5 S7 TO MATCH #5 S5

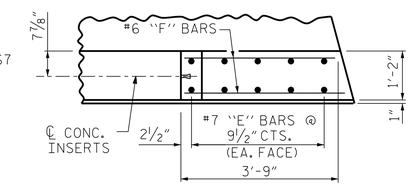

PLAN OF END POST

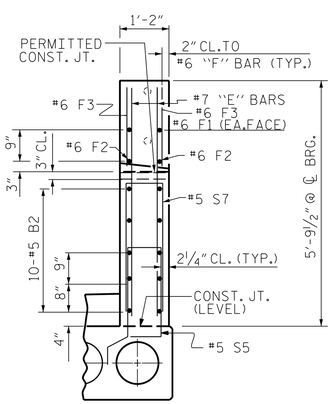

END VIEW

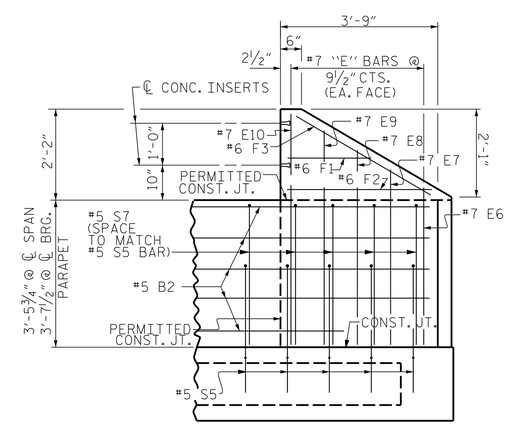

ELEVATION

RIGHT SIDE

PARAPET AND END POST FOR TWO BAR RAIL

DocuSigned by:

NORTH CAROLINA PROFESSIONAL SEAL 22072 ENGINEER ARTHUR D. WORTH 3/14/2016

SEAL

REVISIONS		
NO.	DATE	DESCRIPTION	BY

1223 Jones Franklin Rd.
Raleigh, N.C. 27606
Bus: 919 851 8077
Fax: 919 851 8107
Lincense No. F-0377

WETHERILL ENGINEERING

TRANSPORTATION PLANNING/DESIGN - BRIDGE/STRUCTURE DESIGN
CIVIL/SITE DESIGN - GIS/GPS - CONSTRUCTION OBSERVATION

B-5100, BRIDGE NO. 421
WBS NO. 42236.1.1
CITY OF GREENVILLE NORTH CAROLINA
PITT COUNTY
CONCRETE PARAPET, END POST & SIDEWALK DETAILS

DATE:	1/25/12
SCALE:	N /A
DRAWN:	JCP
CHECKED:	JAD
PROJ. NO.:	B-5100
SHEET NO. S-8	TOTAL SHEETS 21

3/14/2016
B-5100_Greenville\Structures\DWG\Two Bar Metal Railing