DocuSign Envelope ID: BEF9B9C9-CDF8-497D-8D3A-C79544B16B6B

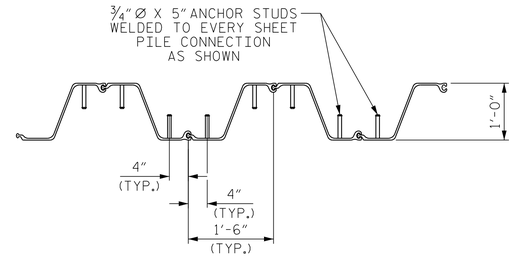

ANCHOR STUD DETAIL

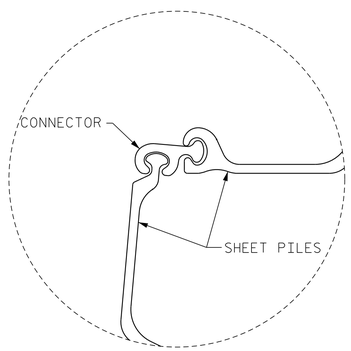

DETAIL "B"

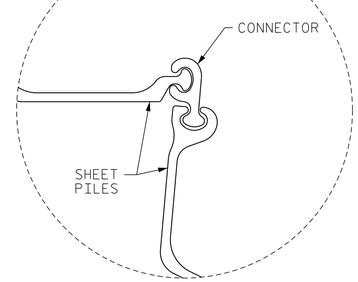

DETAIL "C"

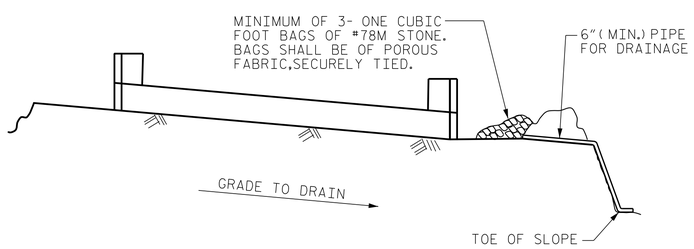

BAGGED STONE AND PIPE SHALL BE PLACED IMMEDIATELY AFTER COMPLETION OF END BENT EXCAVATION. PIPE MAY BE EITHER CONCRETE, CORRUGATED STEEL, CORRUGATED ALUMINUM ALLOY, OR CORRUGATED PLASTIC. PERFORATED PIPE WILL NOT BE ALLOWED.

BAGGED STONE SHALL REMAIN IN PLACE UNTIL THE ENGINEER DIRECTS THAT IT BE REMOVED. THE CONTRACTOR SHALL REMOVE AND DISPOSE OF SILT ACCUMULATIONS AT BAGGED STONE WHEN SO DIRECTED BY THE ENGINEER. BAGS SHALL BE REMOVED AND REPLACED WHENEVER THE ENGINEER DETERMINES THAT THEY HAVE DETERIORATED AND LOST THEIR EFFECTIVENESS.

NO SEPARATE PAYMENT WILL BE MADE FOR THIS WORK AND THE ENTIRE COST OF THIS WORK SHALL BE INCLUDED IN THE UNIT CONTRACT PRICE BID FOR THE SEVERAL PAY ITEMS.

TEMPORARY DRAINAGE AT END BENT

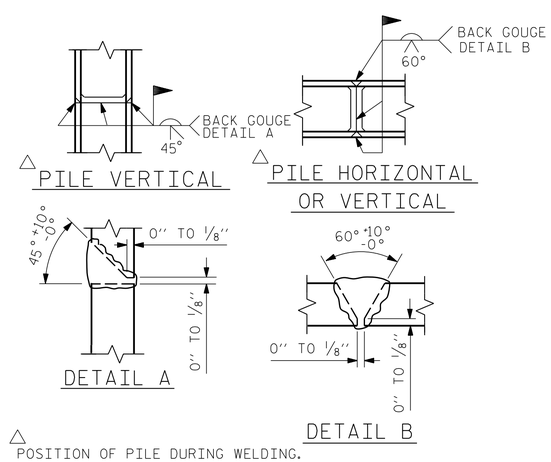

△ POSITION OF PILE DURING WELDING.

PILE SPLICE DETAILS

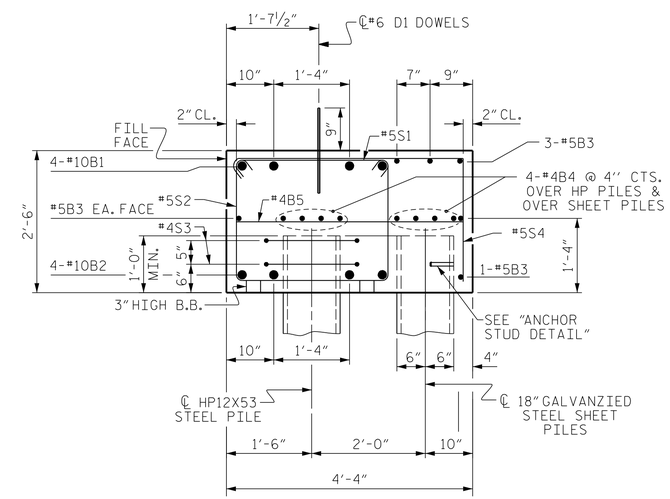

SECTION A-A

BAR TYPES

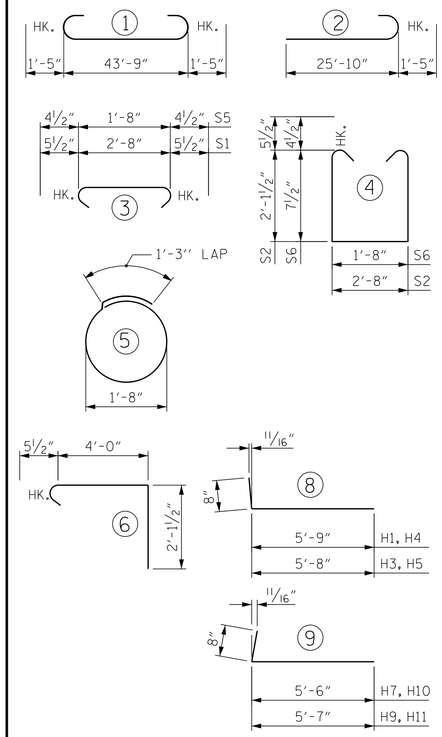

(ALL BAR DIMENSIONS ARE OUT TO OUT.)

BILL OF MATERIAL

END BENT 2

BAR	NO.	SIZE	TYPE	LENGTH	WEIGHT
B1	4	#10	1	46′-7″	802
B2	8	#10	2	27′-3″	938
B3	6	#5	STR	43′-11″	275
B4	16	#4	STR	23′-2″	248
B5	11	#4	STR	4′-0″	29
D1	24	#6	STR	1′-6″	54
H1	1	#4	8	6′-5″	4
H2	2	#4	STR	5′-8″	8
H3	1	#4	8	6′-4″	4
H4	1	#6	8	6′-5″	10
H5	1	#6	8	6′-4″	10
H6	6	#4	STR	4′-2″	17
H7	1	#4	9	6′-2″	4
H8	2	#4	STR	5′-6″	7
H9	1	#4	9	6′-3″	4
H10	1	#6	9	6′-2″	9
H11	1	#6	9	6′-3″	9
H12	6	#4	STR	10′-0″	40
S1	38	#5	3	3′-7″	142
S2	38	#5	4	7′-10″	310
S3	14	#4	5	6′-6″	61
S4	44	#5	6	6′-7″	302
S5	10	#4	3	2′-5″	16
S6	10	#4	4	3′-8″	24
V1	12	#4	STR	4′-8″	37
V2	22	#4	STR	5′-5″	80

REINFORCING STEEL = 3,444 LBS.

CLASS "A" CONCRETE BREAKDOWN

POUR #1 CAP = 17.8 C.Y.

POUR #2 EAR WALLS AND WING COPING = 2.4 C.Y.

TOTAL = 20.2 C.Y.

HP12X53 STEEL PILES
NO. 7 420 LIN. FT

18″ STEEL SHEET PILES
NO. 38 1,425 S.F.
CONNECTORS NO. 2

DocuSigned by:
NORTH CAROLINA PROFESSIONAL SEAL 22072 ENGINEER ARTHUR DILWORTH
3/14/2016

SEAL

REVISIONS			
NO.	DATE	DESCRIPTION	BY

559 Jones Franklin Rd. Suite 164
Raleigh, N.C. 27606
Bus: 919 851 8077
Fax: 919 851 8107
License No. F-0377

ETHERILL ENGINEERING
TRANSPORTATION PLANNING/DESIGN - BRIDGE/STRUCTURE DESIGN
CIVIL/SITE DESIGN - GIS/GPS - CONSTRUCTION OBSERVATION

B-5100, BRIDGE NO. 421
WBS NO. 42236.1.1
CITY OF GREENVILLE NORTH CAROLINA
PITT COUNTY

END BENT 2 DETAILS (SHEET 3 OF 3)

DATE:	8/12
SCALE:	N /A
DRAWN:	GMG
CHECKED:	JAD
PROJ. NO.:	B-5100
SHEET NO. S-18	TOTAL SHEETS 21

3/14/2016
3:04:28 PM
R:\2011\1347.02 B-5100 Greenville\Structures\DWG\B5100_SD_EB2.dgn