DocuSign Envelope ID: BEF9B9C9-CDF8-497D-8D3A-C79544B16B6B

NOTES

STIRRUPS IN CAP MAY BE SHIFTED AS NECESSARY TO CLEAR DOWELS.

FOR PILE SPLICE DETAILS, SEE SHEET 3 OF 3.

FOR WING DETAILS, SEE SHEET 2 OF 3.

CUT 2" Ø MAX. HOLE IN SHEET PILE FOR #10 B2 BARS AS NECESSARY.

STEEL SHEET PILES SHALL BE GALVANIZED. FOR 18" STEEL SHEET PILES, SEE SPECIAL PROVISIONS.

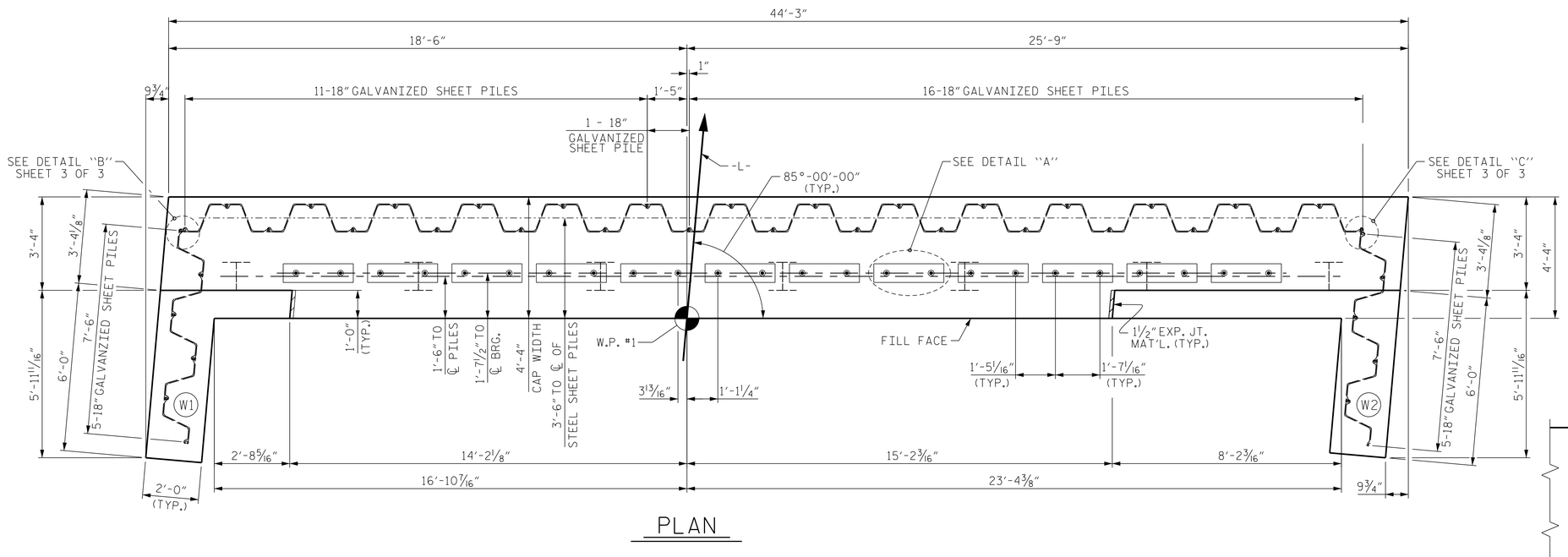

PLAN

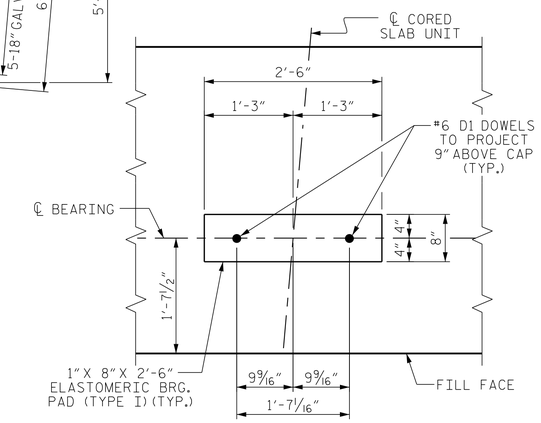

DETAIL "A"

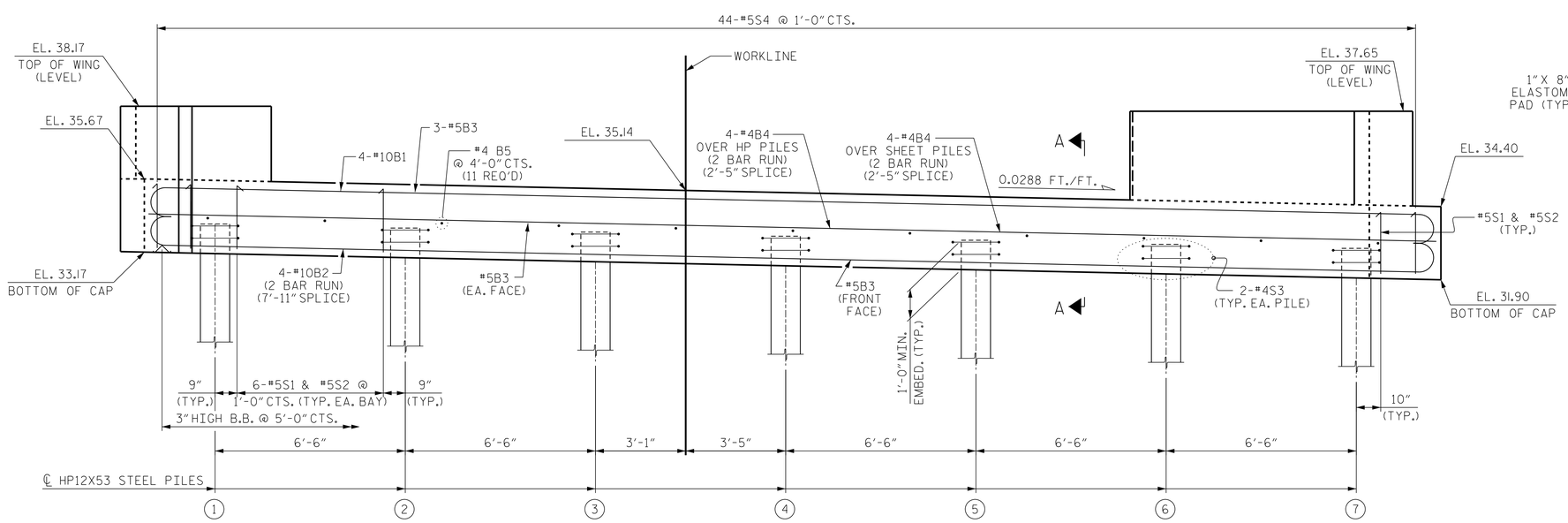

ELEVATION

SHEET PILES NOT SHOWN FOR CLARITY. FOR SECTION A-A, SEE SHEET 3 OF 3.

TOP OF PILE ELEVATIONS	
1	34.10
2	33.91
3	33.72
4	33.53
5	33.35
6	33.16
7	32.97

DocuSigned by:

NORTH CAROLINA PROFESSIONAL SEAL 22072 ENGINEER ARTHUR DILWORTH

3/14/2016

SEAL

REVISIONS			
NO.	DATE	DESCRIPTION	BY

559 Jones Franklin Rd. Suite 164
Raleigh, N.C. 27606
Bus: 919 851 8077
Fax: 919 851 8107
License No. F-0377

ETHERILL ENGINEERING

TRANSPORTATION PLANNING/DESIGN - BRIDGE/STRUCTURE DESIGN
CIVIL/SITE DESIGN - GIS/GPS - CONSTRUCTION OBSERVATION

B-5100, BRIDGE NO. 421
WBS NO. 42236.1.1
CITY OF GREENVILLE
PITT COUNTY *NORTH CAROLINA*

END BENT 1 (SHEET 1 OF 3)

DATE:	8/12
SCALE:	N /A
DRAWN:	GMG
CHECKED:	JAD
PROJ. NO.:	B-5100
SHEET NO. S-13	TOTAL SHEETS 21

3/14/2016
B-5100_PT_01.dgn
BK20111134 02 B-5100 Greenville\Structures\DWG\B5100_SD_EB1.dgn