DocuSign Envelope ID: BEF9B9C9-CDF8-497D-8D3A-C79544B16B6B

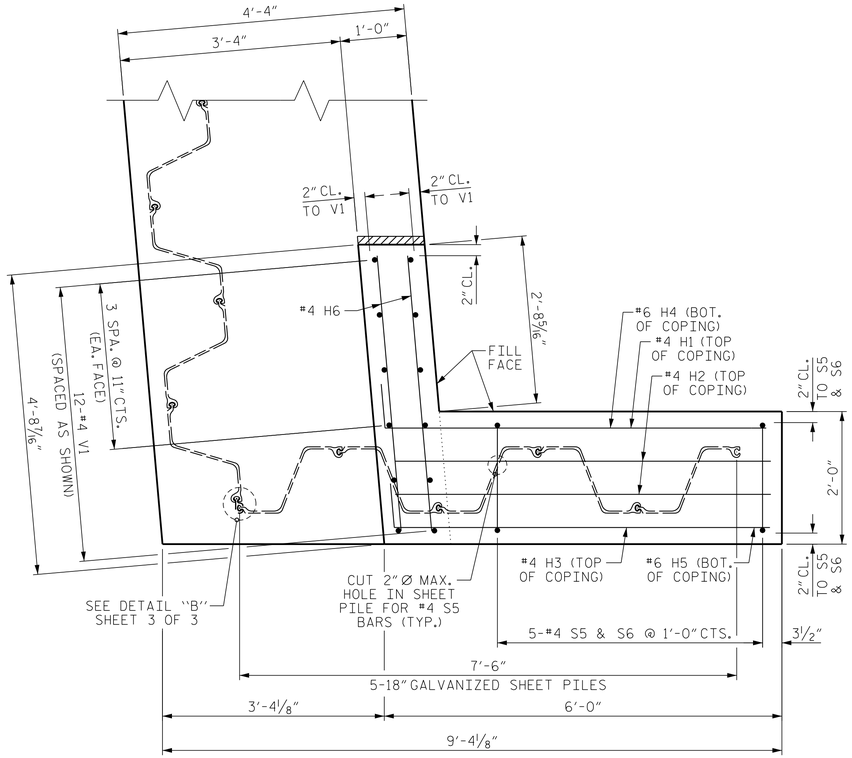

PLAN OF WING (W1)

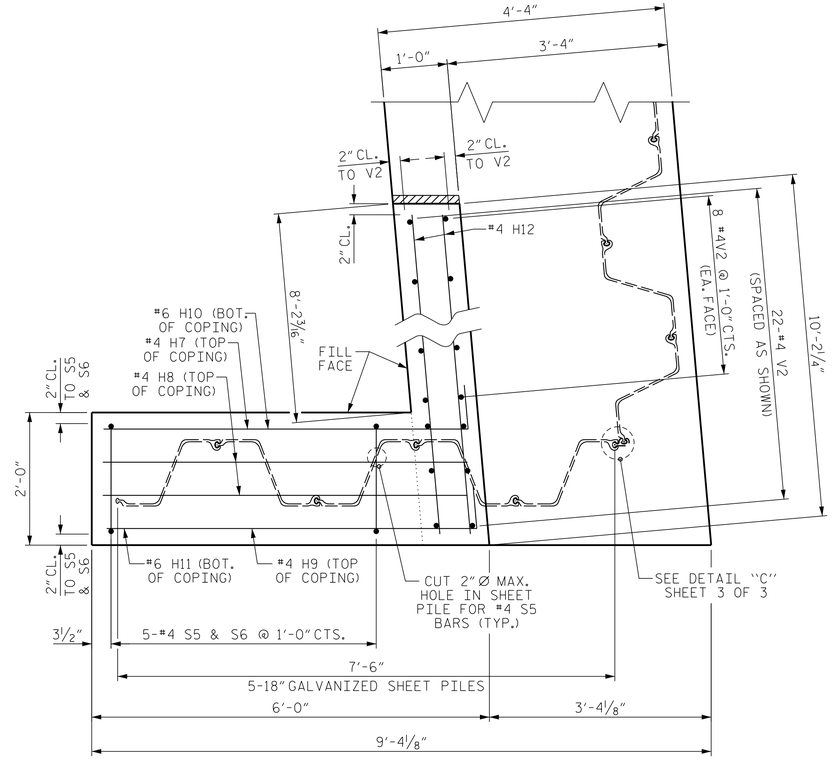

PLAN OF WING (W2)

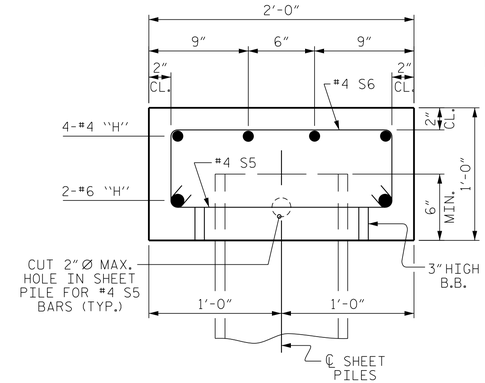

SECTION THROUGH COPING

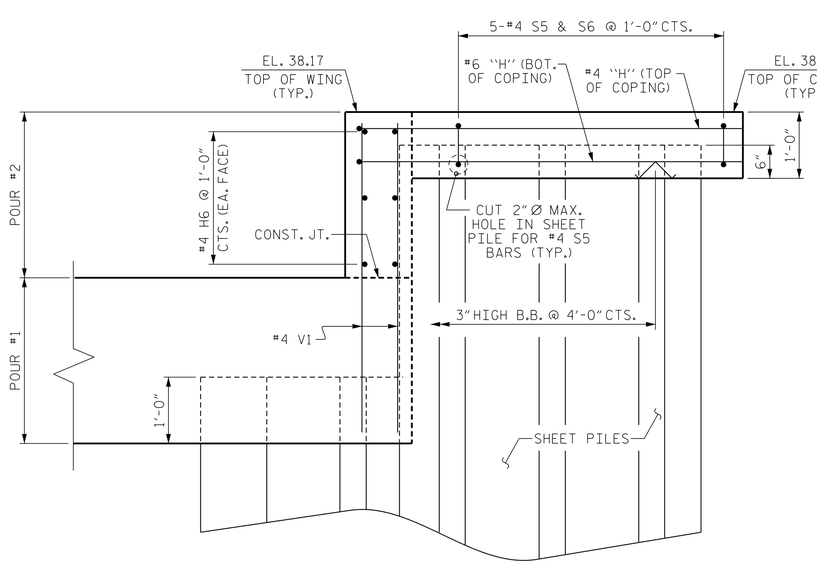

ELEVATION OF WING (W1)

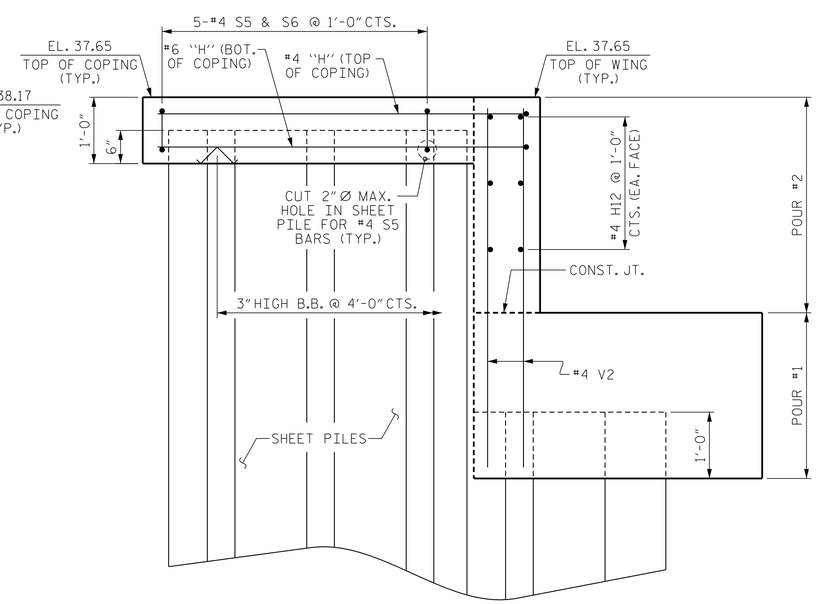

ELEVATION OF WING (W2)

DocuSigned by:

NORTH CAROLINA PROFESSIONAL SEAL 22072 ENGINEER ARTHUR DILWORTH 3/14/2016

SEAL

REVISIONS			
NO.	DATE	DESCRIPTION	BY

WETHERILL ENGINEERING
559 Jones Franklin Rd. Suite 164
Raleigh, N.C. 27606
Bus: 919 851 8077
Fax: 919 851 8107
License No. F-0377

TRANSPORTATION PLANNING/DESIGN - BRIDGE/STRUCTURE DESIGN
CIVIL/SITE DESIGN - GIS/GPS - CONSTRUCTION OBSERVATION

B-5100, BRIDGE NO. 421
WBS NO. 42236.1.1
CITY OF GREENVILLE *NORTH CAROLINA*
PITT COUNTY

END BENT 1 (SHEET 2 OF 3)

DATE:	8/12
SCALE:	N /A
DRAWN:	GMG
CHECKED:	JAD
PROJ. NO.:	B-5100
SHEET NO. S-14	TOTAL SHEETS 21

3/14/2016
3:44:43 PM
R:\2011\11347.02 B-5100 Greenville\Structures\DWG\B5100_SD_EB1.dgn