DocuSign Envelope ID: BEF9B9C9-CDF8-497D-8D3A-C79544B16B6B

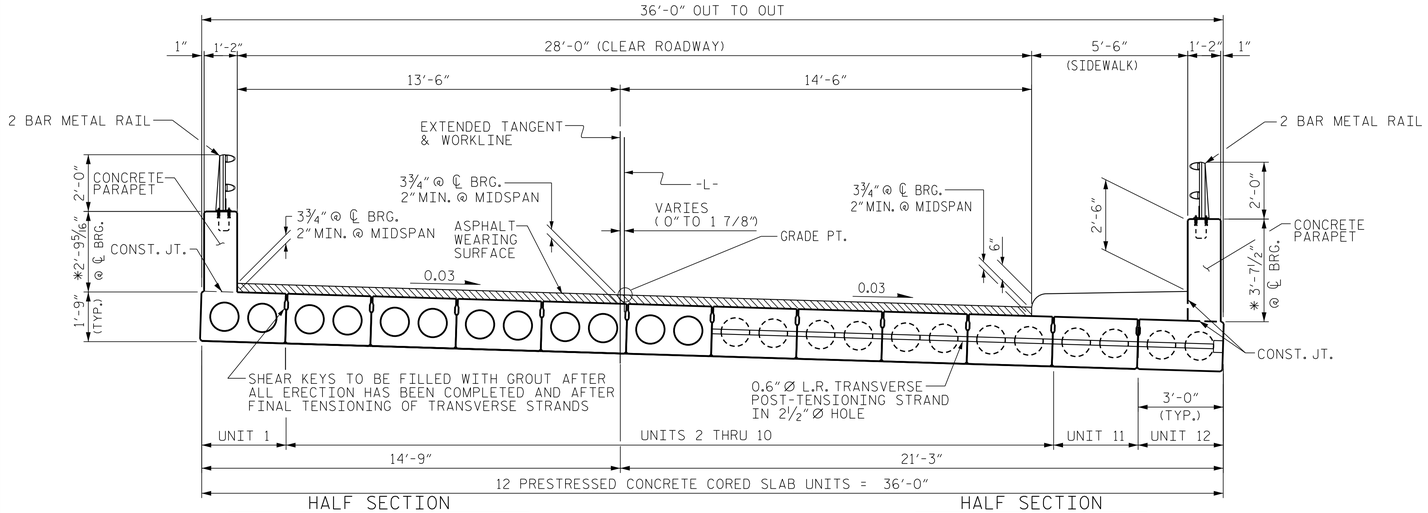

TYPICAL SECTION

* - THE MAXIMUM PARAPET HEIGHT AND ASPHALT THICKNESS ARE SHOWN. THE HEIGHT OF THE PARAPET AND ASPHALT THICKNESS VARY WHILE THE TOP OF THE PARAPET FOLLOWS THE PROFILE OF THE GUTTERLINE.

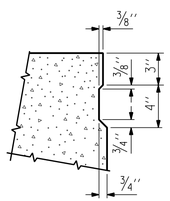

SHEAR KEY DETAIL

NOTE: OMIT SHEAR KEY ON OUTSIDE FACE OF EXTERIOR CORED SLABS.

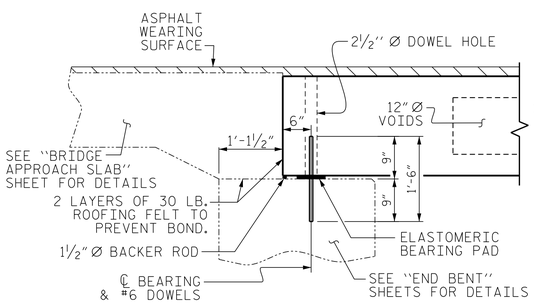

SECTION AT END BENT

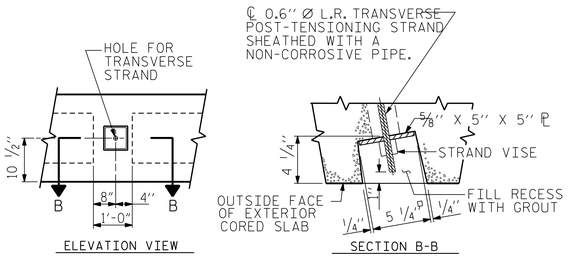

GROUTED RECESS AT END OF POST-TENSIONED STRAND CORED SLABS

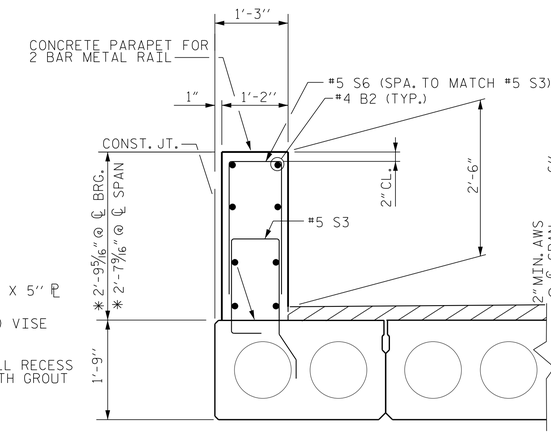

SECTION THRU PARAPET LEFT SIDE

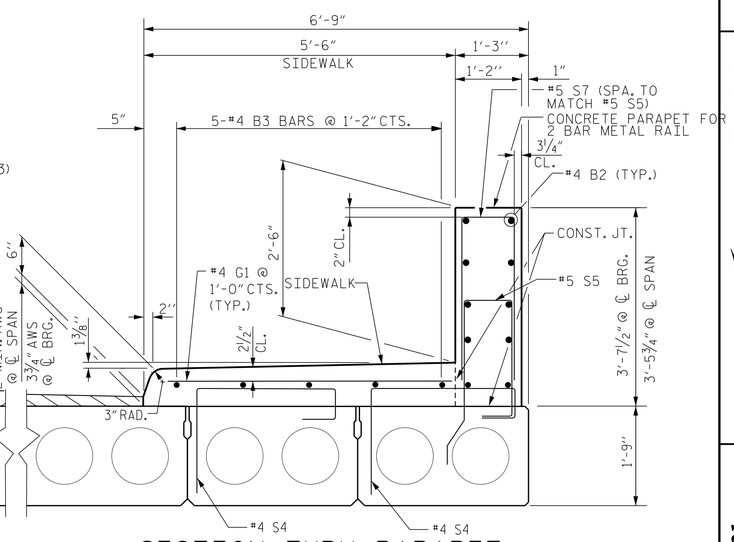

SECTION THRU PARAPET & SIDEWALK - RIGHT SIDE

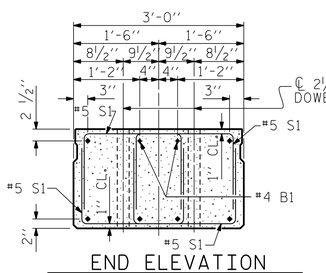

END ELEVATION

SHOWING PLACEMENT OF DOUBLE STIRRUPS AND LOCATION OF DOWEL HOLES. (STRAND LAYOUT NOT SHOWN.) INTERIOR SLAB SECTION SHOWN-EXTERIOR SLAB SECTION SIMILAR EXCEPT SHEAR KEY LOCATION.

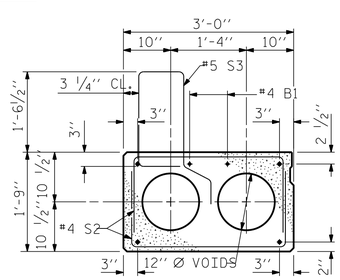

EXTERIOR SLAB SECTION

(FOR PRESTRESSED STRAND LAYOUT, SEE INTERIOR SLAB SECTION.)
(UNIT 1)

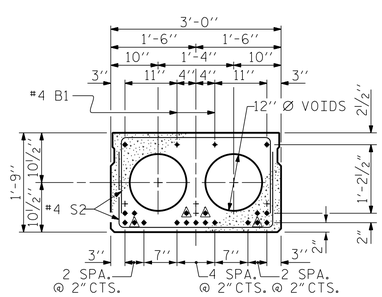

INTERIOR SLAB SECTION
0.6" Ø LOW RELAXATION STRAND LAYOUT

(UNITS 2-10)
(19 - STRANDS REQUIRED, TYPICAL ALL UNITS)

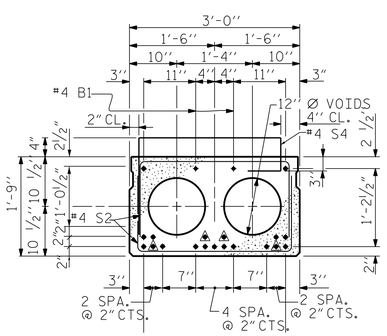

INTERIOR SLAB SECTION
0.6" Ø LOW RELAXATION STRAND LAYOUT

(UNIT 11)

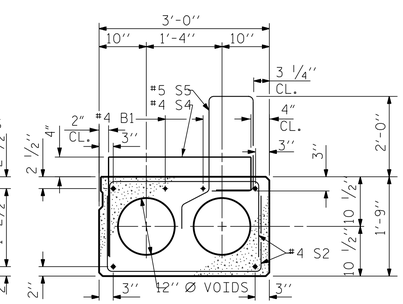

EXTERIOR SLAB SECTION

(FOR PRESTRESSED STRAND LAYOUT, SEE INTERIOR SLAB SECTION.)
(UNIT 12)

BOND SHALL BE BROKEN ON THESE STRANDS FOR A DISTANCE OF 6'-0" FROM END OF CORED SLAB UNIT. SEE STANDARD SPECIFICATIONS, ARTICLE 1078-7.

DEBONDING LEGEND

DocuSigned by:
NORTH CAROLINA PROFESSIONAL SEAL 22072 ENGINEER ARTHUR DILWORTH
3/14/2016

SEAL

REVISIONS

NO.	DATE	DESCRIPTION	BY

(SHEET 2 OF 2)

1223 Jones Franklin Rd.
Raleigh, N.C. 27606
Bus: 919 851 8077
Fax: 919 851 8107
Lincense No. F-0377

WETHERILL ENGINEERING
TRANSPORTATION PLANNING/DESIGN - BRIDGE/STRUCTURE DESIGN
CIVIL/SITE DESIGN - GIS/GPS - CONSTRUCTION OBSERVATION

B-5100, BRIDGE NO. 421
WBS NO. 42236.1.1
CITY OF GREENVILLE
PITT COUNTY NORTH CAROLINA

TYPICAL SECTION & DETAILS

DATE:	1/25/12
SCALE:	N /A
DRAWN:	JCP
CHECKED:	JAD
PROJ. NO.:	B-5100
SHEET NO.	TOTAL SHEETS
S-5	21

3/24/2016 8:52:01 PM
B-5100_Greenville_Structures\DWG\TYPICAL.dgn