DocuSign Envelope ID: 48E8445A-B6A7-44DA-9BC8-F2FC4B918207

PAVEMENT SCHEDULE
FINAL PAVEMENT DESIGN

C1	PROP. APPROX. 3″ ASPHALT CONCRETE SURFACE COURSE, TYPE S9.5B, AT AN AVERAGE RATE OF 168 LBS. PER SQ. YD. IN EACH OF TWO LAYERS.
C2	PROP. VAR. DEPTH ASPHALT CONCRETE SURFACE COURSE, TYPE S9.5B, AT AN AVERAGE RATE OF 112 LBS. PER SQ. YD. PER 1″ DEPTH. TO BE PLACED IN LAYERS NOT TO EXCEED 2″ IN DEPTH.
E1	PROP. APPROX. 4″ ASPHALT CONCRETE BASE COURSE, TYPE B25.0B, AT AN AVERAGE RATE OF 456 LBS. PER SQ. YD.
E2	PROP. VAR. DEPTH ASPHALT CONCRETE BASE COURSE, TYPE B25.0B, AT AN AVERAGE RATE OF 114 LBS. PER SQ. YD. PER 1″ DEPTH. TO BE PLACED IN LAYERS NOT LESS THAN 3″ IN DEPTH OR GREATER THAN 5½″ IN DEPTH.
T	EARTH MATERIAL.
U	EXISTING PAVEMENT.
W	VARIABLE DEPTH ASPHALT PAVEMENT

NOTE: PAVEMENT EDGE SLOPES ARE 1:1 UNLESS SHOWN OTHERWISE.

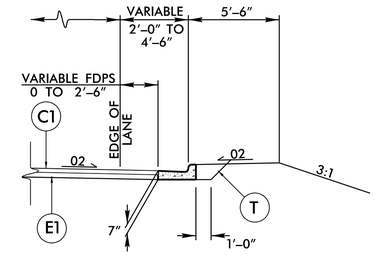

PARTIAL TYPICAL SECTION NO. 1

FDPS = FULL DEPTH PAVED SHOULDER

USE IN CONJUNCTION WITH TYPICAL SECTION NO. 1 & 2

USE TYPICAL SECTION NO. 1

–L– STA. 12+16.77 TO –L– STA. 12+72.50 RT.
–L– STA. 13+27.50 TO –L– STA. 13+65.69 RT.

NOTE: PERFORM INCIDENTAL MILLING AT THE FOLLOWING LOCATIONS
-L- STA. 12+03.87 TO -L- STA. 12+31.31
-L- STA. 13+92.32 TO -L- STA. 13+98.86

NOTE: OVERLAY INTERSECTION WITH 1½″ S9.5B
-L- STA. 14+00.00 TO -L- STA. 14+70.00
-Y- STA. 10+95.00 TO -Y- STA. 11+40.26

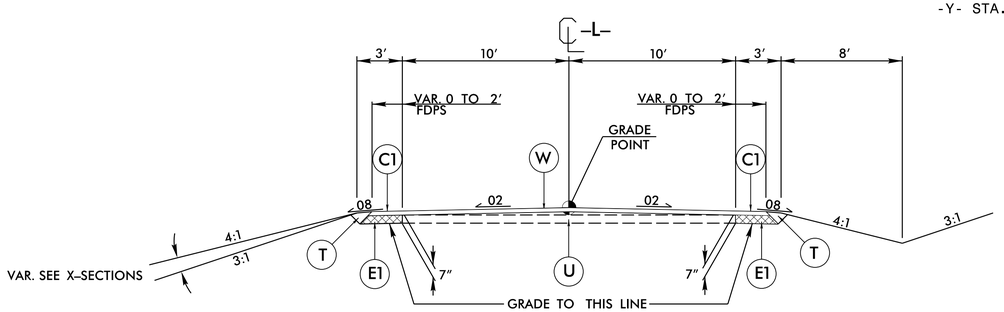

TYPICAL SECTION NO. 1

FDPS = FULL DEPTH PAVED SHOULDER

USE TYPICAL SECTION NO. 1

–L– STA. 11+50.00 TO –L– STA. 12+50.00
–L– STA. 13+47.28 TO –L– STA. 14+00.00

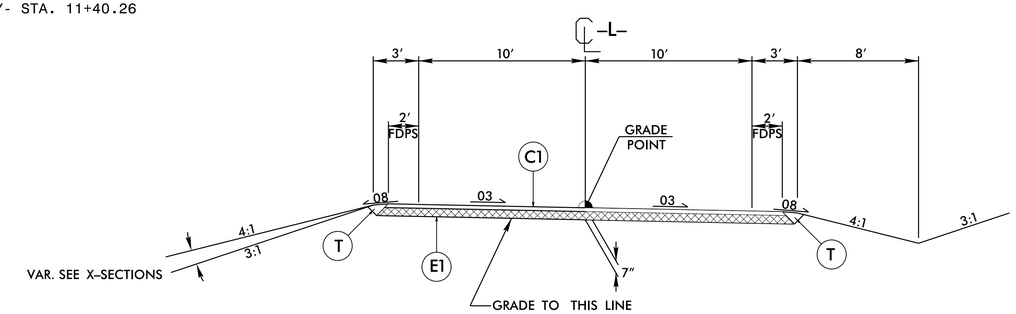

TYPICAL SECTION NO. 2

FDPS = FULL DEPTH PAVED SHOULDER

USE TYPICAL SECTION NO. 2

–L– STA. 12+50.00 TO –L– STA. 12+72.06 (BEGIN BRIDGE)
–L– STA. 13+27.94 (END BRIDGE) TO –L– STA. 13+47.28

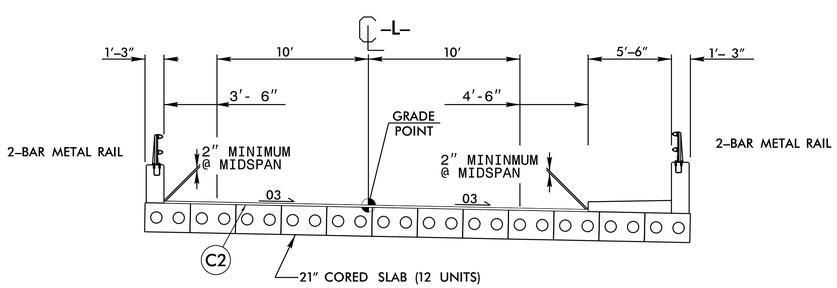

TYPICAL SECTION NO. 3

USE TYPICAL SECTION NO. 3

–L– STA. 12+72.06 TO –L– STA. 13+27.94

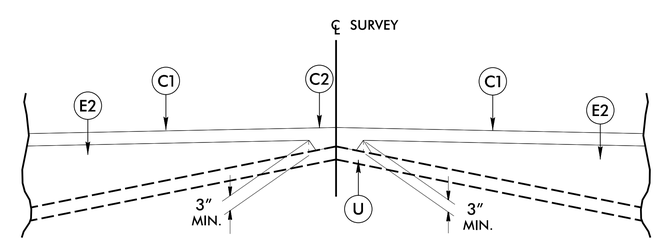

Detail Showing Method of Wedging

SEAL 21116 ENGINEER BOB A. MAY NORTH CAROLINA PROFESSIONAL ENGINEER 3/16/2016

SEAL

REVISIONS

NO.	DATE	DESCRIPTION	BY

1223 Jones Franklin Rd.
Raleigh, N.C. 27606
Bus: 919 851 8077
Fax: 919 851 8107
License No. F-0377

WETHERILL ENGINEERING
TRANSPORTATION PLANNING/DESIGN - BRIDGE/STRUCTURE DESIGN
CIVIL/SITE DESIGN - GIS/GPS - CONSTRUCTION OBSERVATION

B-5100, BRIDGE NO. 421
CITY OF GREENVILLE
PITT COUNTY NORTH CAROLINA

PAVEMENT SCHEDULE & TYPICAL SECTIONS

DATE:	9/8/2011
SCALE:	N /A
DRAWN:	BAM
CHECKED:	
PROJ. NO.:	B-5100
SHEET:	2

3/16/2016
J:\Projects\VPro\B5100_Rdy_typ.dgn
jisenhour