DocuSign Envelope ID: BEF9B9C9-CDF8-497D-8D3A-C79544B16B6B

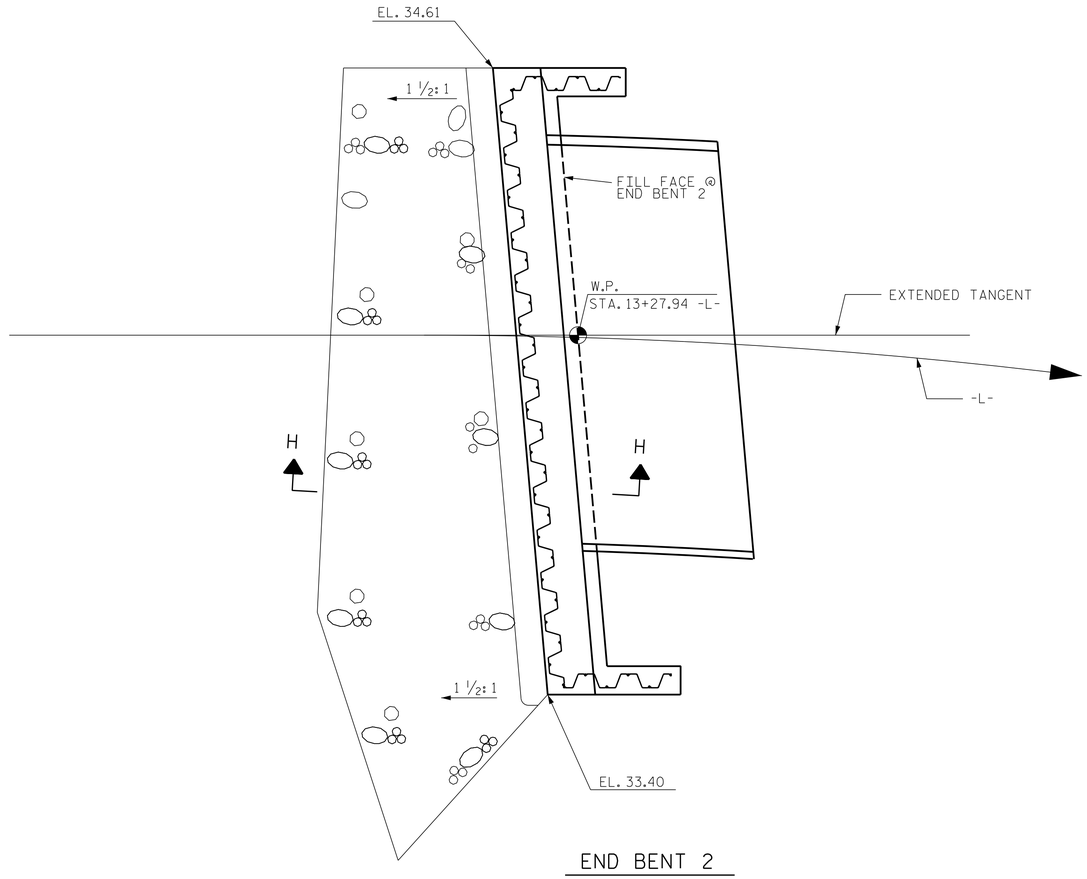

PLAN OF RIP RAP

ESTIMATED QUANTITIES		
BRIDGE @ STA. 13+00.00 -L-	RIP RAP CLASS II (2'-0" THICK)	GEOTEXTILE FOR DRAINAGE
	TONS	SQUARE YARDS
END BENT 2	80	90

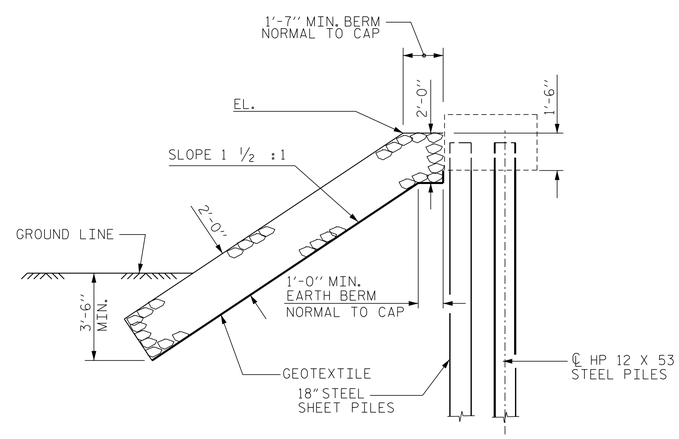

SECTION H-H

DocuSigned by:
NORTH CAROLINA PROFESSIONAL SEAL 22072 ENGINEER ARTHUR DILWORTH
3/14/2016

SEAL

REVISIONS			
NO.	DATE	DESCRIPTION	BY

1223 Jones Franklin Rd.
Raleigh, N.C. 27606
Bus: 919 851 8077
Fax: 919 851 8107
License No. F-0377

WETHERILL ENGINEERING

TRANSPORTATION PLANNING/DESIGN - BRIDGE/STRUCTURE DESIGN
CIVIL/SITE DESIGN - GIS/GPS - CONSTRUCTION OBSERVATION

B-5100, BRIDGE NO. 421
WBS NO. 42236.1.1
CITY OF GREENVILLE
PITT COUNTY *NORTH CAROLINA*

RIP RAP DETAILS

DATE:	9-11-14
SCALE:	N /A
DRAWN:	JCP
CHECKED:	BCH
PROJ. NO.:	B-5100
SHEET NO. S-19	TOTAL SHEETS 21

3/14/2016
3:46:29 PM
BK5011\1347.02\B-5100_Greenville\Structures\DWG\B5100_SD_RR.dgn