DocuSign Envelope ID: BEF9B9C9-CDF8-497D-8D3A-C79544B16B6B

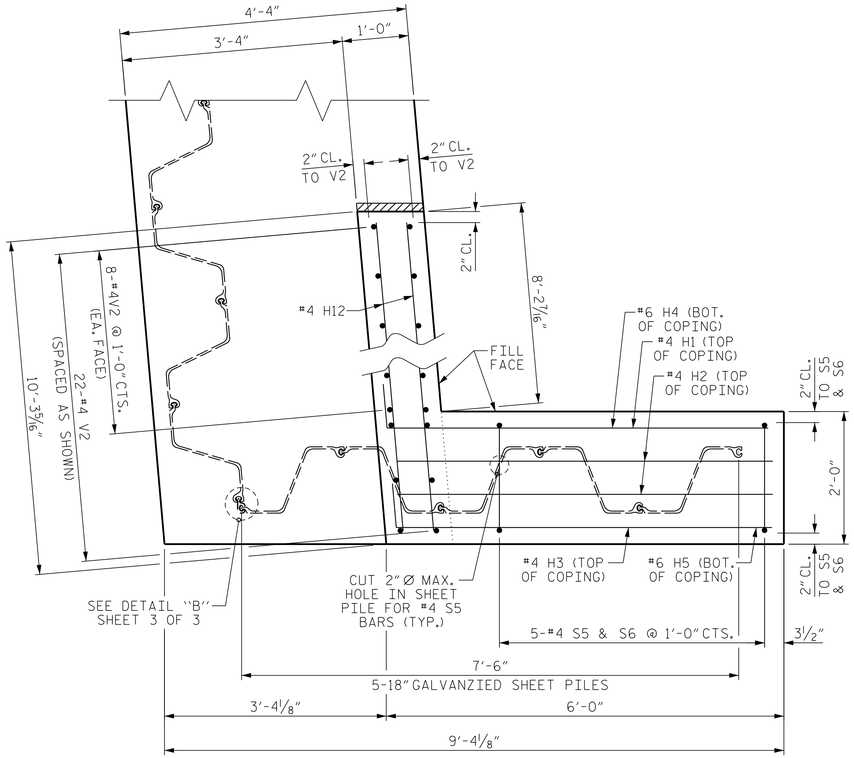

PLAN OF WING (W2)

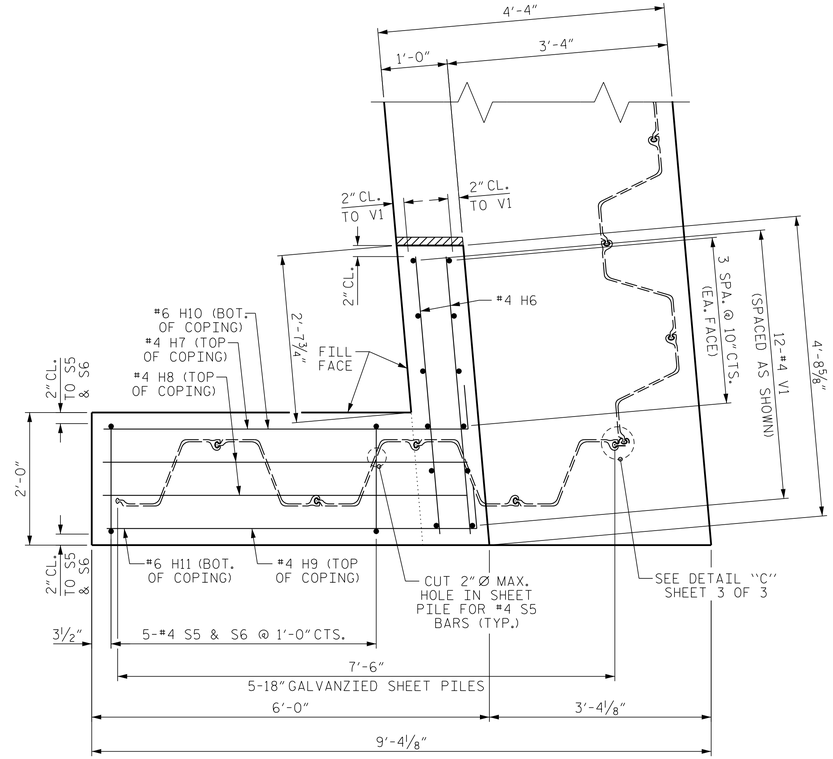

PLAN OF WING (W1)

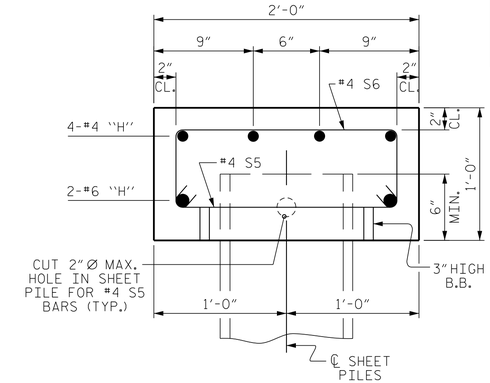

SECTION THROUGH COPING

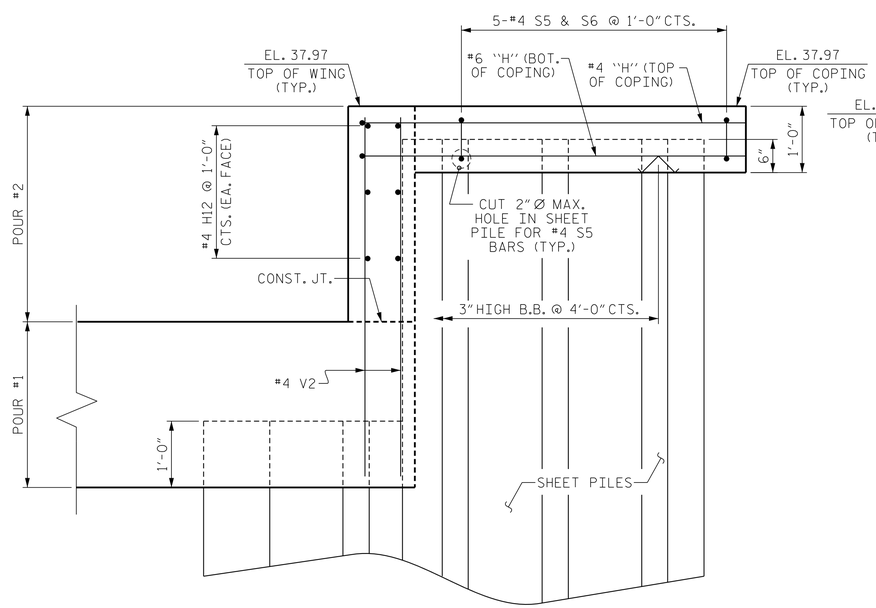

ELEVATION OF WING (W2)

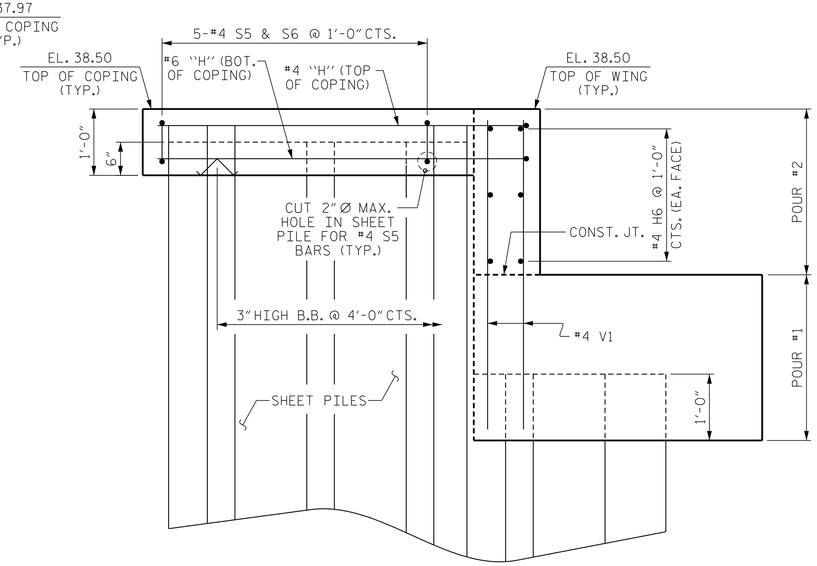

ELEVATION OF WING (W1)

DocuSigned by:
NORTH CAROLINA PROFESSIONAL SEAL 22072 ENGINEER ARTHUR DILWORTH
3/14/2016

SEAL

REVISIONS			
NO.	DATE	DESCRIPTION	BY

ETHERILL ENGINEERING
559 Jones Franklin Rd. Suite 164
Raleigh, N.C. 27606
Bus: 919 851 8077
Fax: 919 851 8107
License No. F-0377
TRANSPORTATION PLANNING/DESIGN - BRIDGE/STRUCTURE DESIGN
CIVIL/SITE DESIGN - GIS/GPS - CONSTRUCTION OBSERVATION

B-5100, BRIDGE NO. 421
WBS NO. 42236.1.1
CITY OF GREENVILLE
PITT COUNTY *NORTH CAROLINA*

END BENT 2 (2 OF 3)

DATE:	8/12
SCALE:	N /A
DRAWN:	GMG
CHECKED:	JAD
PROJ. NO.:	B-5100
SHEET NO. S-17	TOTAL SHEETS 21

3/14/2016
3:46:29 PM
BK2601\11347.02 B-5100 Greenville\Structures\DWG\B5100_SD_EB2.dgn