DocuSign Envelope ID: BEF9B9C9-CDF8-497D-8D3A-C79544B16B6B

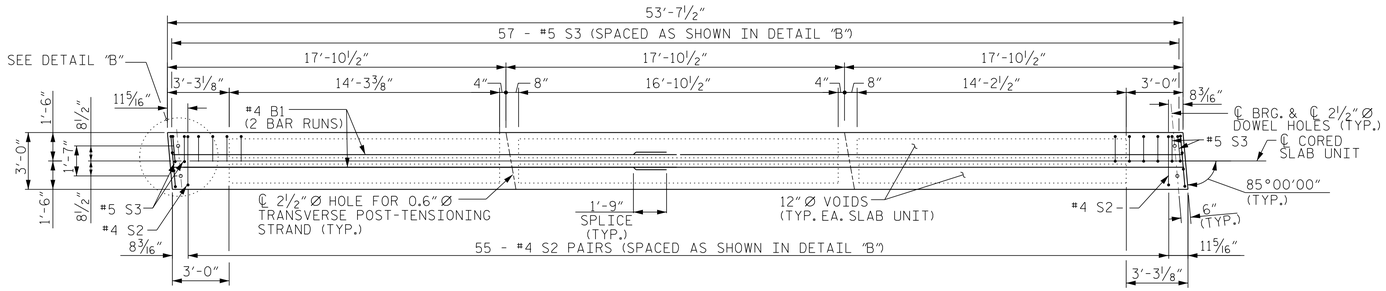

PLAN OF SLAB, UNIT 1

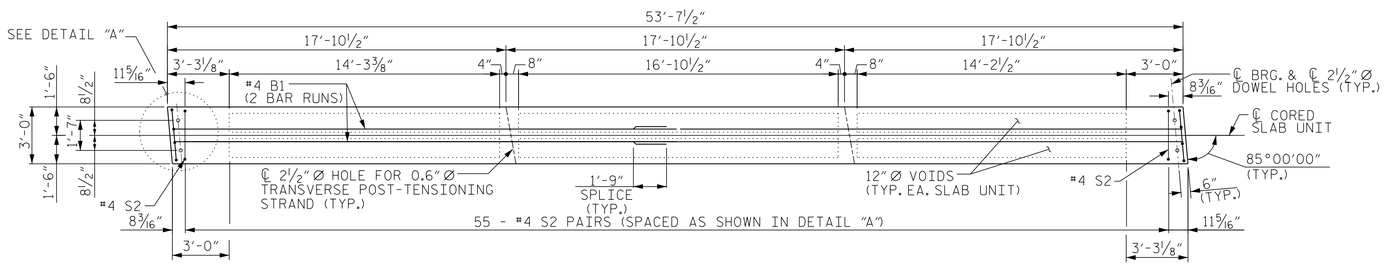

PLAN OF SLAB, UNIT 2 THRU 10

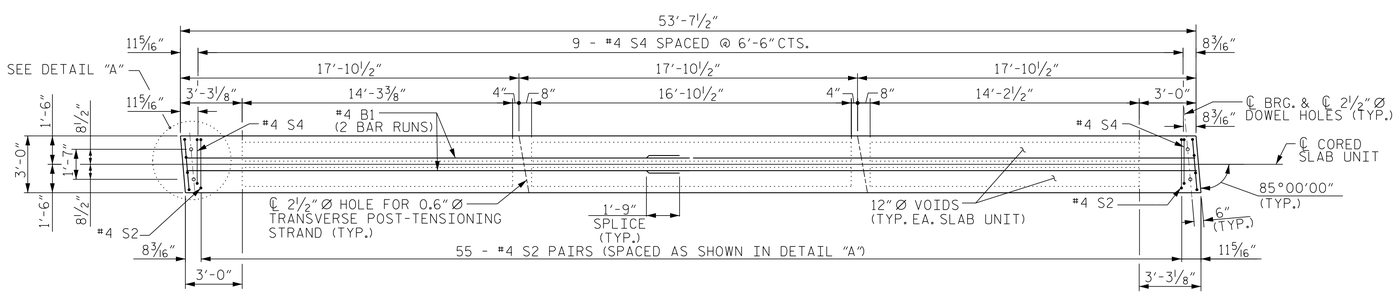

PLAN OF SLAB, UNIT 11

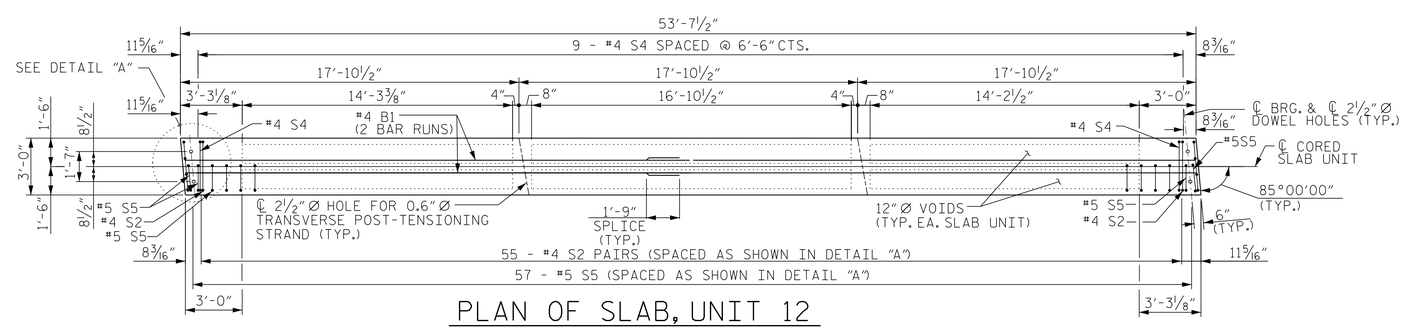

PLAN OF SLAB, UNIT 12

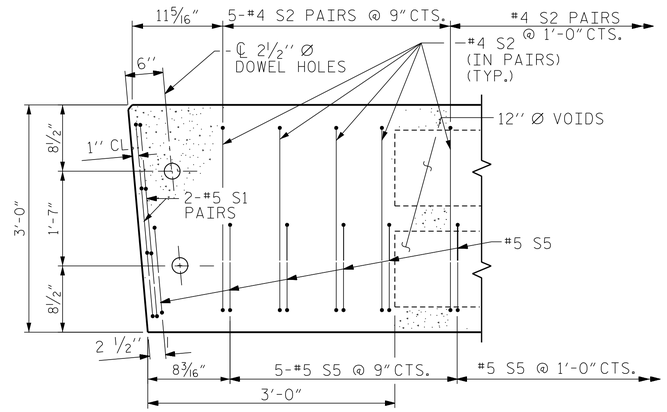

DETAIL "A"

NOTE: EXTERIOR UNIT 12 SECTION SHOWN-INTERIOR SECTIONS SIMILAR EXCEPT OMIT S5 BARS.

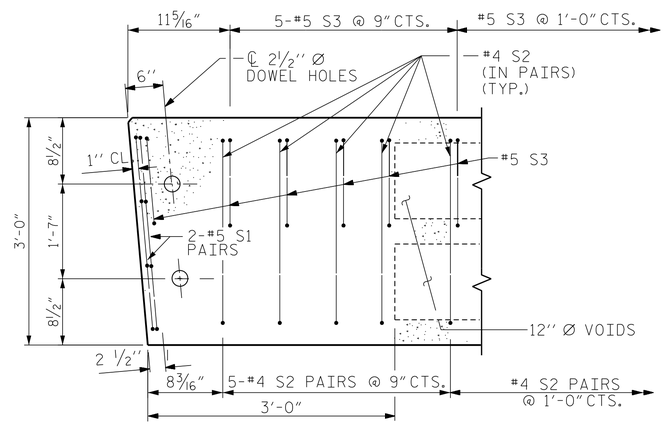

DETAIL "B"

NOTE: EXTERIOR UNIT 1 SECTION SHOWN-INTERIOR SECTIONS SIMILAR EXCEPT OMIT S3 BARS.

DocuSigned by:
NORTH CAROLINA PROFESSIONAL SEAL 22072 ENGINEER ARTHUR DILWORTH
3/14/2016

SEAL

REVISIONS			
NO.	DATE	DESCRIPTION	BY

1223 Jones Franklin Rd.
Raleigh, N.C. 27606
Bus: 919 851 8077
Fax: 919 851 8107
Lincense No. F-0377

ETHERILL ENGINEERING

TRANSPORTATION PLANNING/DESIGN - BRIDGE/STRUCTURE DESIGN
CIVIL/SITE DESIGN - GIS/GPS - CONSTRUCTION OBSERVATION

B-5100, BRIDGE NO. 421
WBS NO. 42236.1.1
CITY OF GREENVILLE
PITT COUNTY NORTH CAROLINA

PLAN OF SLAB UNITS

DATE:	1/25/12
SCALE:	N /A
DRAWN:	JCP
CHECKED:	JAD
PROJ. NO.:	B-5100
SHEET NO. S-7	TOTAL SHEETS 21

3/14/2016
3:34:19 PM
BK2011\1142.02 B-5100 Greenville\Structures\DWG\SPAN.dgn