DocuSign Envelope ID: BEF9B9C9-CDF8-497D-8D3A-C79544B16B6B

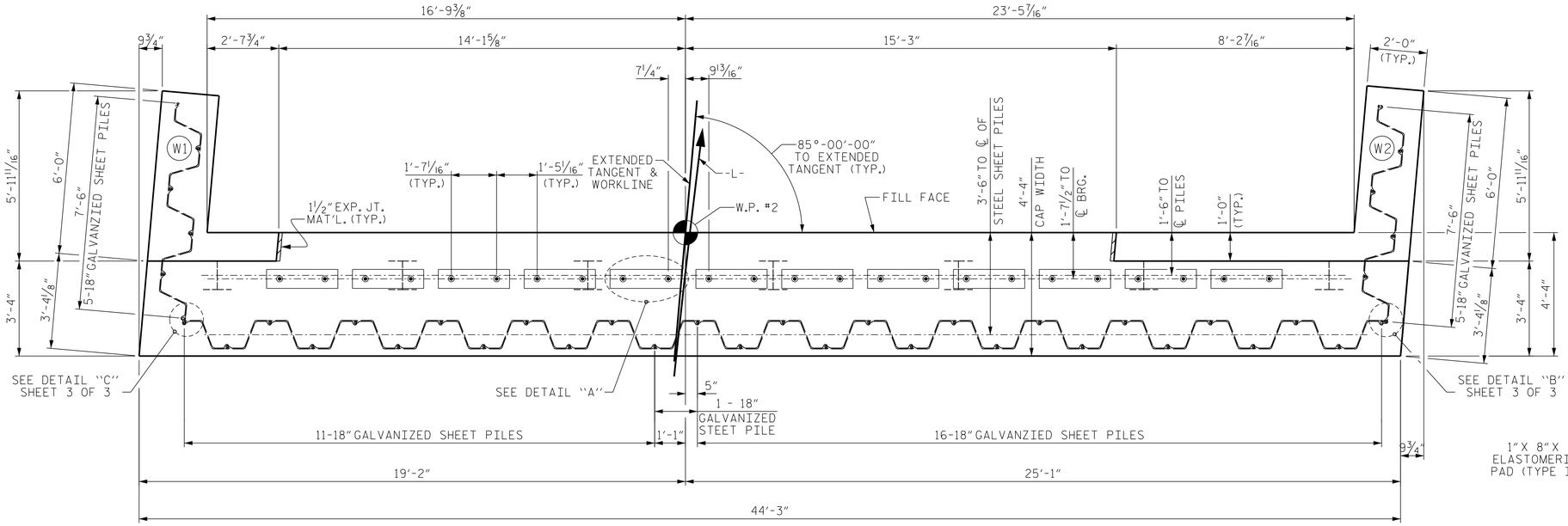

PLAN

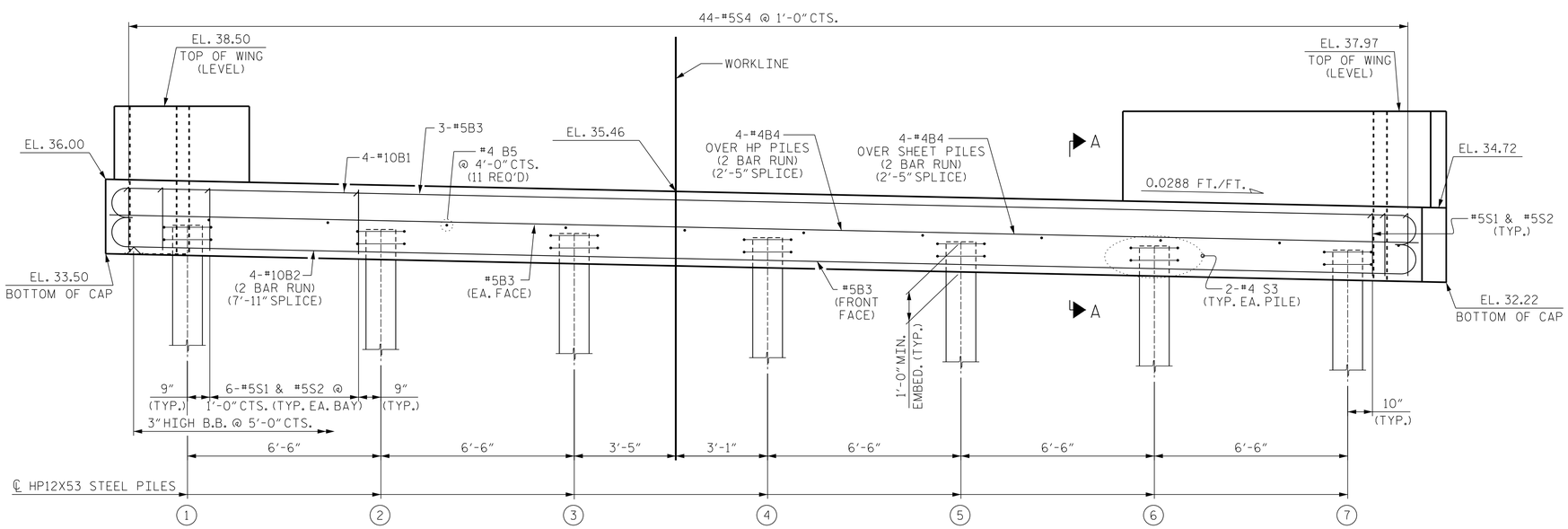

ELEVATION

SHEET PILES NOT SHOWN FOR CLARITY. FOR SECTION A-A, SEE SHEET 3 OF 3.

NOTES

STIRRUPS IN CAP MAY BE SHIFTED AS NECESSARY TO CLEAR DOWELS.

FOR PILE SPLICE DETAILS, SEE SHEET 3 OF 3.

FOR WING DETAILS, SEE SHEET 2 OF 3.

CUT 2" Ø MAX. HOLE IN SHEET PILE FOR #10 B2 BARS AS NECESSARY.

STEEL SHEET PILES SHALL BE GALVANIZED. FOR 18" STEEL SHEET PILES, SEE SPECIAL PROVISIONS.

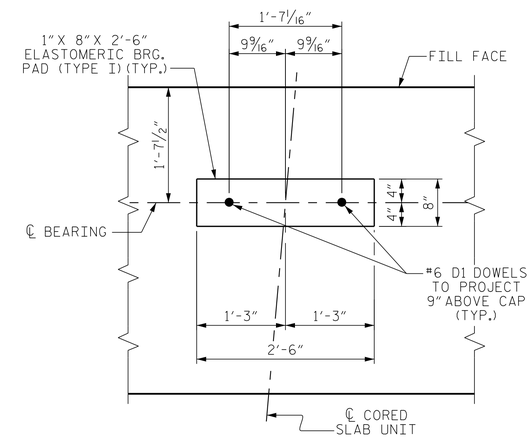

DETAIL "A"

TOP OF PILE ELEVATIONS	
1	34.49
2	34.30
3	34.12
4	33.93
5	33.74
6	33.55
7	33.37

DocuSigned by:

NORTH CAROLINA PROFESSIONAL SEAL 22072 ENGINEER ARTHUR D. LIWORTH

3/14/2016

SEAL

REVISIONS

NO.	DATE	DESCRIPTION	BY

559 Jones Franklin Rd. Suite 164
Raleigh, N.C. 27606
Bus: 919 851 8077
Fax: 919 851 8107
License No. F-0377

ETHERILL ENGINEERING

TRANSPORTATION PLANNING/DESIGN - BRIDGE/STRUCTURE DESIGN
CIVIL/SITE DESIGN - GIS/GPS - CONSTRUCTION OBSERVATION

B-5100, BRIDGE NO. 421
WBS NO. 42236.1.1
CITY OF GREENVILLE NORTH CAROLINA
PITT COUNTY

END BENT 2 (1 OF 3)

DATE:	8/12
SCALE:	N /A
DRAWN:	GMG
CHECKED:	JAD
PROJ. NO.:	B-5100
SHEET NO. S-16	TOTAL SHEETS 21

3/14/2016 2:28:11:34:02 PM
Es:\B5100\Greenville\Structures\DWG\B5100_SD_EB2.dgn