# GREENVILLE FIRE RESCUE #1
# BAY EXPANSION

**GREENVILLE, NC 27834**

## ABBREVIATIONS

### A

| | |
|---|---|
| @ | AT |
| A, AMP | AMPERE'S |
| AB | ANCHOR BOLT |
| ABV | ABOVE |
| A/C | AIR CONDITIONING |
| ACOU | ACOUSTICAL |
| ACT | ACOUSTICAL CEILING TILE |
| ADA | AMERICANS with DISABILITY ACT |
| ADJ. | ADJUSTABLE |
| ADMIN | ADMINISTRATIVE |
| AF | ATHLETIC FLOORING |
| AFC | ABOVE FINISHED CEILING |
| AFF | ABOVE FINISHED FLOOR |
| AGG | AGGREGATE |
| AHU | AIR HANDLING UNIT |
| AL.ST. | ALUMINUM STOREFRONT |
| ALUM | ALUMINUM |
| ALT | ALTERNATE |
| ∠ | ANGLE |
| ANOD | ANODIZED |
| AP | ACCESS PANEL |
| ACT | ACOUSTICAL CEILING TILE |
| APC | ACOUSTICAL PANEL CEILING |
| APPROX | APPROXIMATELY |
| ARCH | ARCHITECTURAL |
| ASS'Y | ASSEMBLY |
| ASTM | AMERICAN SOCIETY for TESTING and MATERIALS |
| AUX | AUXILIARY |
| AWI | ARCH. WOODWORK INSTITUTE |

### B

| | |
|---|---|
| BD | BOARD |
| BLDG | BUILDING |
| BLK | BLOCK |
| BLKG | BLOCKING |
| BM | BEAM |
| BO, B/O | BY OTHERS |
| B.O. | BY OWNER/BOTTOM OF |
| BOS | BOTTOM OF STEEL |
| B, BOTT | BOTTOM |
| BRS | BLACKOUT ROLLER SHADE |
| BRZ | BRONZE |
| BTU | BRITISH THERMAL UNIT |
| BV | BRICK VENEER |

### C

| | |
|---|---|
| C | CENTIGRADE |
| CAB | CABINET |
| CAP | CAPACITY |
| CBB | CEMENTITIOUS BACKER BOARD |
| CFMF | COLD-FORMED METAL FRAMING |
| CG | CORNER GUARD |
| CH | COAT HOOK |
| CHBD | CHALK BOARD |
| CI | CAST IRON |
| CJ | CONTROL JOINT |
| CL, ℄ | CENTER LINE |
| CLG | CEILING |
| CLO | CLOSET |
| CLR | CLEAR |
| CMU | CONCRETE MASONRY UNIT |
| COL | COLUMN |
| COMP | COMPRESSOR |
| CONC | CONCRETE |
| CONF | CONFERENCE |
| CONNX | CONNECTION |
| CONST. | CONSTRUCTION |
| CONT,CONT'D | CONTINUOUS,CONTINUED |
| CONTR | CONTRACTOR |
| CORR,CRDR | CORRIDOR |
| CRS | COURSE |
| CS | CAST STONE |
| CT | CERAMIC TILE |
| CTK | CURTAIN TRACK |
| CTR | COUNTER |
| CU | CUBIC |
| CUST | CUSTODIAN |
| CWFP | CEMENTITIOUS WOOD FIBER PLANK |

### D

| | |
|---|---|
| DBL | DOUBLE |
| DECON | DECONTAMINATION |
| DEF | DEFORMED |
| DIA, ø | DIAMETER |
| DIAG | DIAGRAM |
| DIM | DIMENSION |
| DISP | DISPENSER |
| DIV | DIVISION |
| DN | DOWN |
| DOCS | DOCUMENTS |
| DP | DAMPPROOFING |
| DR | DOOR |
| DRY | CLOTHES DRYER |
| DS | DOWNSPOUT |
| DTL | DETAIL |
| DW | DISHWASHER |
| DWG, DWGS | DRAWING, DRAWINGS |
| DWLS | DOWELS |
| DWR | DRAWER |

### E

| | |
|---|---|
| E, ELEC | ELECTRICAL |
| EA | EACH |
| EF | EXHAUST FLUE |
| EGSB | EXTERIOR GYPSUM SOFFIT BOARD |
| EIFS | EXTERIOR INSULATED FINISH SYSTEM |
| EJ | EXPANSION JOINT |
| EL, ELEV | ELEVATION |
| ELECT | ELECTRIC, ELECTRICAL |
| EMS | EMERGENCY MEDICAL SERVICES |
| EMT | ELECTRICAL METALLIC TUBING |
| EQ | EQUAL |
| EQUIP | EQUIPMENT |
| ETC | ET CETERA |
| EW | EACH WAY |
| EWC | ELECTRIC WATER COOLER |
| EX | EXERCISE |
| EXGR | EXISTING GRADE |
| EXH | EXHAUST |
| EXIST,EXG | EXISTING |
| EXP | EXPANSION |
| EXPD | EXPOSED |
| EXT | EXTERIOR |

### F

| | |
|---|---|
| F | FAHRENHEIT |
| FA | FIRE ALARM |
| FC | FIRE CODE |
| FD | FLOOR DRAIN |
| FE | FIRE EXTINGUISHER |
| FEC | FIRE EXTINGUISHER CABINET |
| FF | FINISH FLOOR |
| FFE | FINISH FLOOR ELEVATION |
| FGD | FINISH GRADE |
| FHC | FIRE HOSE CABINET |
| FIN | FINISH |
| FLASH | FLASHING |
| FLR | FLOOR |
| FOC | FACE OF CONCRETE |
| FOM | FACE OF MASONRY |
| FOLD | PART FOLDING PARTITION |
| FRP | FIBER REINFORCED PLASTIC |
| FR-WD | FIRE-RETARDANT TREATED WOOD |
| FRX | FIRE-RETARDANT TREATED |
| FS | FOOT SCRAPER |
| FT | FEET |
| Fy | YIELD STRESS |
| FUR | FURRING |
| FV | FIELD VERIFY |

### G

| | |
|---|---|
| G | GAS |
| GA | GAUGE |
| GALV | GALVANIZED |
| GB | GRAB BAR |
| GC | GENERAL CONTRACTOR |
| GD | GRADE |
| GDW,GYP.BD. | GYPSUM DRYWALL |
| GEN | GENERAL |
| GL | GLASS |
| GMMU | GLASS MESH MORTAR UNITS |
| GND | GROUND |
| GSFT | GLAZED STRUCTURAL FACING TILE |
| GYP | GYPSUM |

### H

| | |
|---|---|
| HB | HOSE BIBB |
| HC | HANDICAPPED, HOLLOW CORE |
| HCFV | HOLLOW CORE FINISH VENEER |
| HD | HEAD, HEADED, HEAVY DUTY |
| HDG | HOT-DIPPED GALVANIZED |
| HDWR | HARDWARE |
| HEWC | HANDICAP ELECTRIC WATER COOLER |
| HLB | HORIZONTAL LOUVER BLINDS |
| HM | HOLLOW METAL |
| HORIZ,H | HORIZONTAL |
| HP | HARDIE PLANK SIDINGS |
| HR,HRS | HOUR, HOURS |
| HT. | HEIGHT |
| HTB | HARDIE TRIM BOARD |
| HVAC | HEATING VENTILATION AIR CONDITIONING |
| HWD | HARDWOOD |

### I

| | |
|---|---|
| IAW | IN ACCORDANCE WITH |
| ID | INSIDE DIAMETER/ DIMENSION |
| IG | INSULATING GLASS |
| IN | INCH, INCHES |
| INC | INCANDESCENT |
| INCL | INCLUDING |
| INSUL | INSULATION |
| INT | INTERIOR |
| IT | INFORMATION TECHNOLOGY |

### J

| | |
|---|---|
| J/C | JANITOR CLOSET |
| JAN | JANITOR |
| JST | JOIST |
| JT | JOINT |

### K

| | |
|---|---|
| KIT | KITCHEN |
| KS | KEY STONE |

### L

| | |
|---|---|
| L | ANGLE SHAPE |
| LAM | LAMINATE |
| LAUN | LAUNDRY |
| LAV | LAVATORY |
| LB, LBS | POUND, POUNDS |
| LF | LINEAR FOOT |
| LG | LENGTH |
| LIB | LIBRARY |
| LLH | LONG LEG HORIZONTAL |
| LLV | LONG LEG VERTICAL |
| LSD | LIQUID SOAP DISPENSER |
| LVR | LOUVER |
| LVT | LUXURY VINYL TILE |
| LW | LIGHTWEIGHT |

### M

| | |
|---|---|
| MAINT | MAINTENANCE |
| MAS | MASONRY |
| MASH | MINERAL AGGREGATE SURFACE HARDENER |
| MAT | MATERIAL |
| MAX | MAXIMUM |
| MB | MOP BASIN |
| MC | MEDICINE CABINET |
| MECH,MECH'L | MECHANICAL |
| MEP | MECHANICAL/ELECTRICAL/ PLUMBING |
| MEZZ | MEZZANINE |
| MET, MTL | METAL |
| MFR | MANUFACTURER |
| MGR | MANAGER |
| MH | MANHOLE |
| MID | MIDDLE |
| MIN | MINIMUM |
| MIR | MIRROR |
| MISC | MISCELLANEOUS |
| MKBD | MARKER BOARD |
| MM | MILLIMETER |
| MMB | MEMBRANE |
| MO | MASONRY OPENING |
| MP | METAL PANEL |
| MPH | MILES PER HOUR |
| MSG | MANUFACTURER'S STANDARD GAUGE |
| MTCS | MULTI-TONE COLOR SYSTEM |
| MT | MARBLE THRESHOLD |
| MULL | MULLION |
| MW | MICROWAVE |

### N

| | |
|---|---|
| NA | NOT APPLICABLE |
| NEG | NEGATIVE |
| NIC | NOT IN CONTRACT |
| NO, # | NUMBER |
| NOM | NOMINAL |
| NTS | NOT TO SCALE |

### O

| | |
|---|---|
| OC | ON CENTER |
| OCD | OVERHEAD COILING DOOR |
| OCEW | ON CENTER EACH WAY |
| OCG | OVERHEAD COILING GRILL |
| OD | OUTSIDE DIAMETER/ DIMENSION |
| OFF | OFFICE |
| OH | OVERHEAD |
| OPH | OPPOSITE HAND |
| OPNG | OPENING |
| OPP | OPPOSITE |
| ORD | OVERFLOW ROOF DRAIN |

### P

| | |
|---|---|
| PA | PUBLIC ADDRESS |
| PAR | PARALLEL |
| PCP | PORTLAND CEMENT PLASTER |
| PEN | PENETRATION |
| PERP | PERPENDICULAR |
| PFT | PORCELAIN FLOOR TILE |
| PG | PLATE GLASS |
| PL, P | PLATE |
| PLAM | PLASTIC LAMINATE |
| PLAS | PLASTER |
| PLT | PLASTIC |
| PLYWD | PLYWOOD |
| PNL | PANEL |
| POS | POSITIVE |
| PR | PAIR |
| PREFAB | PREFABRICATED |
| PREFIN, PF | PREFINISHED |
| PNT | PAINT |
| PNTGR | PAINT GRADE |
| PR | PAIR |
| PSI | POUNDS per SQUARE INCH |
| PT | PRESSURE TREATED |
| PTD | PAPER TOWEL DISPENSER |
| PTN | PARTITION |
| PVC | POLYVINYL CHLORIDE |
| PVMT | PAVEMENT |

### Q

| | |
|---|---|
| QA | QUALITY ASSURANCE |
| QT | QUARRY TILE |

### R

| | |
|---|---|
| R/F | REFRIGERATOR/FREEZER |
| R | RADIUS |
| RAF | RESILIENT ATHLETIC FLOORING |
| RB | RESILIENT BASE |
| RCP | REINFORCED CONCRETE PIPE |
| RD | ROOF DRAIN |
| REINF | REINFORCED, REINFORCEMENT |
| REF | REFER, REFERENCE |
| REP | REPRESENTATIVE |
| REQD,REQ'D | REQUIRED |
| RO | ROUGH OPENING |
| RM | ROOM |
| RV | ROOF VENT |
| RWAF | RESILIENT WOOD ATHLETIC FLOORING |

### S

| | |
|---|---|
| SB | SPLASH BLOCK |
| SC | SOLID CORE |
| SCFV | SOLID CORE FLUSH VENEER |
| SCH,SCHED | SCHEDULE |
| SD | SMOKE DETECTOR |
| SEC | SECONDARY |
| SF | SQUARE FEET |
| SGFT | STRUCTURAL GLAZED FACING TILE |
| SGL | SINGLE |
| SH,SHT | SHEET |
| SHR | SHOWER |
| SIM | SIMILAR |
| SJ | SAWN CONTROL JOINT |
| SLD | SEALED |
| SND | SANITARY NAPKIN DISPOSAL UNIT |
| SNT | SEALANT |
| SNV | SANITARY NAPKIN VENDOR |
| SPA | SPACES |
| SPECS | SPECIFICATIONS |
| SF | SPORT FLOORING |
| SQ | SQUARE |
| SR | SHOWER ROD |
| SS | STAINLESS STEEL |
| SSK | SERVICE SINK |
| STD | STANDARD |
| STL | STEEL |
| STOR | STORAGE |
| STRUCT,STRCT | STRUCTURE,STRUCTURAL |
| SUS | SUSPENDED |
| SYS | SYSTEM |

### T

| | |
|---|---|
| T, TEL | TELEPHONE |
| T | TOP |
| TBV | THIN BRICK VENEER |
| TC | TEACHER CABINET |
| TECH | TECHNICAL |
| TEMP | TEMPERATURE |
| THK | THICK, THICKNESS |
| TKBD | TACKBOARD |
| TKS | TACK STRIP |
| TKSF | TACK SURFACE |
| TLT | TOILET |
| T.O. | TOP OF |
| TOC | TOP OF CURB |
| TOD | TOP OF DRAIN |
| TOG | TURN OUT GEAR |
| TOM | TOP OF MASONRY |
| TOS | TOP OF STEEL |
| TP | TOILET PARTITION |
| TTD | TOILET TISSUE DISPENSER |
| TV | TELEVISION |
| TWC | TEXTILE WALL COVERING |
| TYP | TYPICAL |

### U

| | |
|---|---|
| UBC | UNIFORM BUILDING CODE |
| UL | UNDERWRITER LABORATORIES |
| UNO | UNLESS NOTED |
| URS | URINAL SCREEN |
| UTIL | UTILITY |
| UV | ULTRAVIOLET |

### V

| | |
|---|---|
| V | VOLTS |
| V, VERT | VERTICAL |
| VCT | VINYL COMPOSITION TILE |
| VEND | VENDING |
| VEST | VESTIBULE |
| VTR | VENT THROUGH ROOF |
| VWC | VINYL WALL COVERING |

### W

| | |
|---|---|
| W | WATTS |
| W/ | WITH |
| WASH | WASHING MACHINE |
| WB | WIND BRACE |
| WBBP | WIND BRACE BASEPLATE |
| WC | WATER CLOSET |
| WD | WOOD |
| WH | WATER HEATER |
| WNDW | WINDOW |
| WO | WITHOUT |
| WOM | WOMEN |
| WP | WEATHERPROOF |
| WPG | WATERPROOFING |
| WR | WASTE RECEPTACLE |
| WRB | WATER-RESISTANT BARRIER |
| WRGBB | WATER RESISTANT GYPSUM BACKER BOARD |
| WR-WD | WATER-RESISTANT TREATED WOOD |
| WSTRIP | WEATHER-STRIP |
| WT | WEIGHT |
| WWF | WELDED-WIRE FABRIC |

## SITE MAP

## VICINITY MAP

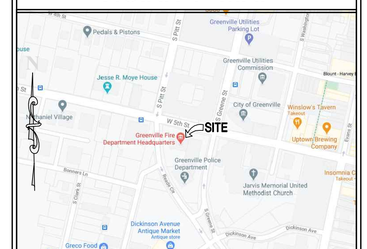


**PROJECT LOCATION:**
500 S GREENE ST, GREENVILLE, NC 27834

**ALTERNATE STORAGE/STAGING LOCATION:**
600 S PITT ST, GREENVILLE, NC 27834

## INDEX OF DRAWINGS


### GENERAL
C-1 COVER SHEET

### LIFE SAFETY
1.00 CODE DATA – APPENDIX B / LIFE SAFETY PLAN

### STRUCTURAL
S0.01 GENERAL NOTES
S0.02 ABBREVIATIONS / PLAN LEGEND
S1.10 FOUNDATION PLAN
S1.20 LOW STEEL FRAMING PLAN
S1.30 HIGH STEEL ROOF FRAMING PLAN
S3.10 SECTIONS
S3.20 SECTIONS
S5.10 TYPICAL DETAILS
S5.20 TYPICAL DETAILS

### ARCHITECTURAL
4.00 DEMOLITION PLAN, ELEVATION & DETAILS
4.01 OVERALL SITE
4.02 SITE SURVEY
4.10 FLOOR PLAN (WITH DIMENSIONS)
4.11 FLOOR PLAN & FINISHES (WITH NOTES & TAGS)
4.12 ROOF PLAN, NOTES & DETAILS
5.10 BUILDING ELEVATIONS
5.11 BUILDING SECTIONS
5.20 WALL SECTIONS & DETAILS
5.21 SECTIONS & DETAILS

### PLUMBING
P0.01 PLUMBING NOTES, LEGEND, SCHEDULES AND DETAILS
P1.01 DEMO AND NEW WORK PLANS – PLUMBING

### FIRE PROTECTION
F0.01 FIRE PROTECTION SPECIFICATIONS, DESIGN DATA, AND DETAILS
F1.01 NEW WORK PLAN – FIRE PROTECTION

### MECHANICAL
M0.01 MECHANICAL NOTES, LEGEND, AND SPECIFICATIONS
M0.02 MECHANICAL SCHEDULES AND DETAILS
M1.01 NEW WORK DUCTWORK PLAN – MECHANICAL
M2.01 NEW WORK PIPING PLAN – MECHANICAL

### ELECTRICAL
10.00 ELECTRICAL LEGEND AND NOTES
10.01 ELECTRICAL SPECIFICATIONS
10.02 WALL PENETRATION DETAILS
10.03 ELECTRICAL DETAILS
10.10 ELECTRICAL FLOOR PLAN – EXISTING & DEMOLITION
10.11 ELECTRICAL FLOOR PLAN – NEW WORK
10.12 ELECTRICAL ROOF PLAN
10.21 LIGHTING PLAN – NEW WORK
10.51 ELECTRICAL SCHEDULES & RISER DIAGRAM


## MATERIAL LEGEND

- EARTH (UNDISTURBED)
- EARTH (COMPACTED)
- STRUCTURAL CONCRETE
- BRICK (COMMON OR FACE)
- CONCRETE MASONRY UNITS (CMU)
- CUT STONE
- METAL
- TERRAZZO
- PLASTER, SAND, CEMENT, GROUT
- GLASS
- RIGID INSULATION
- BATT INSULATION
- ROUGH WOOD (CONTINUOUS)
- ROUGH WOOD (NON-CONTINUOUS)
- FINISH WOOD

## ARCHITECT'S RENDERING

## PROJECT TEAM


### ARCHITECT
STEWART COOPER NEWELL ARCHITECTS
719 E. SECOND AVENUE
GASTONIA, NC 28054
PH (704) 865-6311 FAX (704) 865-0046

### STRUCTURAL
LYNCH MYKINS STRUCTURAL ENGINEERS
301 N WEST STREET, SUITE 105
RALEIGH, NC 27603
PH (919) 782-1833 FAX (919) 782-7630

### PLUMBING, FIRE PROTECTION, MECHANICAL, ELECTRICAL
OPTIMA ENGINEERING, P.A.
150 FAYETTEVILLE STREET, SUITE 520
RALEIGH, NC 27601
PH (919) 926-2200


## PLAN SYMBOLS

- + 445 — NEW OR REQUIRED POINT ELEVATION
- + 233.4 — EXISTING POINT ELEVATION
- 334 — EXISTING CONTOURS
- 223 — NEW CONTOURS
- ROOM NAME 101 — ROOM NAME AND NUMBER
- 1 / A — COLUMN REFERENCE GRID (LETTER, NUMBER)
- 100 / A / 1 2 — DOOR NUMBER, DOOR TYPE, INSTALL NUMBER & HARDWARE GROUP
- N — TRUE NORTH
- 1 — WALL TYPE
- 1 / 5.12 — SECTION
- 1 / 5.10 — ELEVATION
- 1 / 5.30 — DETAIL
- 1 — REVISION #
- F-1 — FRAME TYPE
- A — WINDOW TYPE
- LEVEL LINE
- N — PLAN NORTH
- DIM TO STEEL LINE
- DIM TO CENTER LINE
- DIM FACE OF STUD OR MASONRY

Project No. 1667

Date Printed: 11.12.2020
Drawn by: IS/JJ
Checked by: JRS
Revisions


© STEWART-COOPER-NEWELL ARCHITECTS, P.A.

THIS DRAWING IS THE PROPERTY OF STEWART-COOPER-NEWELL ARCHITECTS, P.A. UNDER THE COPYRIGHT PROTECTION OF LAWS. THIS DRAWING MAY NOT BE REPRODUCED, PUBLISHED OR USED IN ANY WAY WITHOUT THE WRITTEN PERMISSION OF STEWART-COOPER-NEWELL ARCHITECTS, P.A.


STEWART-COOPER-NEWELL-ARCHITECTS, P.A. REGISTERED ARCHITECTURAL CORPORATION LIC. NO. 51313 NORTH CAROLINA GASTONIA, N.C.


Stewart · Cooper · Newell Architects
719 East Second Avenue
Gastonia, NC 28054
Phone: 704.865.6311
Fax: 704.865.0046
1.800.671.0621
www.scn-architects.com


JAMES ROBERT STUMBO REGISTERED ARCHITECT 5728 10/31/2020 NORTH CAROLINA HICKORY, N.C.

BAY EXPANSION FOR
GREENVILLE FIRE RESCUE #1
GREENVILLE, NC

COVER SHEET

Sheet No. C-1

# 2018 APPENDIX B
## BUILDING CODE SUMMARY FOR ALL COMMERCIAL PROJECTS
**(EXCEPT 1 AND 2-FAMILY DWELLINGS AND TOWNHOUSES)**
(Reproduce the following data on the building plans sheet 1 or 2)

Name of Project: Greenville Fire Rescue #1 Bay Expansion
Address: 500 S Greene St, Greenville NC Zip Code 27834
Owner/Authorized Agent: Kevin Mulligan Phone # (252) 329 - 4522 E-Mail: kmulligan@greenvillenc.gov
Owned By: City
Code Enforcement Jurisdiction: City

**CONTACT: :** James R. Stumbo (704) 865-6311

| DESIGNER | FIRM | NAME | LICENSE # | TELEPHONE # | E-MAIL |
|---|---|---|---|---|---|
| Architectural | Stewart Cooper Newell Architects | James R. Stumbo | 5728 | (704) 865-6311 | jstumbo@scn-architects.com |
| Civil | n/a | | | | |
| Landscape | n/a | | | | |
| Electrical | Optima Engineering | Christopher C. Cook | 039771 | (919) 926-2200 | ccook@optimaengineering.com |
| Fire Alarm | Optima Engineering | Christopher C. Cook | 039771 | (919) 926-2200 | ccook@optimaengineering.com |
| Plumbing | Optima Engineering | Morgan K. Gunter | 048210 | (919) 926-2200 | mgunter@optimaengineering.com |
| Mechanical | Optima Engineering | Gary P. Kosten | 032219 | (919) 926-2200 | gkosten@optimaengineering.com |
| Sprinkler-Standpipe | n/a | | | | |
| Structural | Lynch Mykins Structural Engineers | Daniel P. Donecker | 040415 | (919) 782-6331 | ddonecker@lynchmykins.com |
| Retaining Walls >5' High | n/a | | | ( ) | |
| Other | | | | ( ) | |

("Other" should include firms and individuals such as truss, precast, pre-engineered, interior designers, etc.)

**2018 NC BUILDING CODE:** Addition
**2018 NC EXISTING BUILDING CODE:** Select one Select one Select one
**CONSTRUCTED:** (date) _____ **CURRENT OCCUPANCY(S)** (Ch. 3): _____
**RENOVATED:** (date) _____ **PROPOSED OCCUPANCY(S)** (Ch. 3): _____
**RISK CATEGORY** (Table 1604.5): **Current:** Select one **Proposed:** Select one

**BASIC BUILDING DATA**
**New Addition - Construction Type:** II-B
**Sprinklers:** Yes NFPA 13
**Standpipes:** No
**Primary Fire District:** No **Secondary Fire District:** Yes **Flood Hazard Area:** No
**Special Inspections Required:** Yes (Contact the local inspection jurisdiction for additional procedures and requirements.)

**Gross Building Area Table**

| FLOOR | EXISTING (SQ FT) | NEW (SQ FT) | SUB-TOTAL |
|---|---|---|---|
| 3rd Floor | 7,104 | | |
| 2nd Floor | 17,795 | | |
| Mezzanine | | | |
| 1st Floor | 23,057 | 677 | 23,734 |
| Basement | | | |
| TOTAL | 47,956 | 677 | 48,633 |



### ALLOWABLE AREA

**Primary Occupancy Classification(s):** Select one Storage - S-2 Select one Select one Select one Select one
**Accessory Occupancy Classification(s):** None
**Incidental Uses** (Table 509): None
**Special Uses (Chapter 4 – List Code Sections):** None
**Special Provisions: (Chapter 5 – List Code Sections):** None
**Mixed Occupancy:** No Separation: Select one Exception: _____

Non-Separated Use (508.3)

$$\frac{\text{Actual Area of Occupancy A}}{\text{Allowable Area of Occupancy A}} + \frac{\text{Actual Area of Occupancy B}}{\text{Allowable Area of Occupancy B}} \leq 1$$

$$___ + ___ + \ldots\ldots = ___ \leq 1.00$$

| STORY NO. | DESCRIPTION AND USE | (A) BLDG AREA PER STORY (ACTUAL) | (B) TABLE 506.2[4] AREA | (C) AREA FOR FRONTAGE INCREASE[1,2] | (D) ALLOWABLE AREA PER STORY OR UNLIMITED[2,3] |
|---|---|---|---|---|---|
| First-Addition | (S-2) Storage | 667 | 104,000 | n/a | 104,000 |
| First-Existing | (S-2) Storage | 6,071 | 104,000 | n/a | 104,000 |
| | | | | | |

[1] Frontage area increases from Section 506.3 are computed thus:
a. Perimeter which fronts a public way or open space having 20 feet minimum width = n/a (F)
b. Total Building Perimeter = n/a (P)
c. Ratio (F/P) = n/a (F/P)
d. W = Minimum width of public way = n/a (W)
e. Percent of frontage increase $I_f = 100[F/P - 0.25] \times W/30$ = n/a (%)
[2] Unlimited area applicable under conditions of Section 507.
[3] Maximum Building Area = total number of stories in the building x D (maximum 3 stories) (506.2).
[4] The maximum area of open parking garages must comply with Table 406.5.4.
[5] Frontage increase is based on the unsprinklered area value in Table 506.2.

### ALLOWABLE HEIGHT

| | ALLOWABLE | SHOWN ON PLANS | CODE REFERENCE [1] |
|---|---|---|---|
| Building Height in Feet (Table 504.3) [2] | 75 feet | 24 feet | |
| Building Height in Stories (Table 504.4) [3] | 4 | 1 | |

[1] Provide code reference if the "Shown on Plans" quantity is not based on Table 504.3 or 504.4.
[2] The maximum height of air traffic control towers must comply with Table 412.3.1.
[3] The maximum height of open parking garages must comply with Table 406.5.4.



### FIRE PROTECTION REQUIREMENTS

| BUILDING ELEMENT | FIRE SEPARATION DISTANCE (FEET) | RATING REQ'D | RATING PROVIDED (W/_____* REDUCTION) | DETAIL # AND SHEET # | DESIGN # FOR RATED ASSEMBLY | SHEET # FOR RATED PENETRATION | SHEET # FOR RATED JOINTS |
|---|---|---|---|---|---|---|---|
| Structural Frame, including columns, girders, trusses | | 0 | 0 | | | | |
| Bearing Walls | | | | | | | |
| Exterior | | 0 | 0 | | | | |
| North | | 0 | 0 | | | | |
| East | | 0 | 0 | | | | |
| West | | 0 | 0 | | | | |
| South | | 0 | 0 | | | | |
| Interior | | 0 | 0 | | | | |
| Nonbearing Walls and Partitions Exterior walls | | - | - | | | | |
| North | | 0 | 0 | | | | |
| East | | 0 | 0 | | | | |
| West | | 0 | 0 | | | | |
| South | | 0 | 0 | | | | |
| Interior walls and partitions | | 0 | 0 | | | | |
| Floor Construction Including supporting beams and joists | | 0 | 0 | | | | |
| Floor Ceiling Assembly | | 0 | 0 | | | | |
| Columns Supporting Floors | | 0 | 0 | | | | |
| Roof Construction, including supporting beams and joists | | 0 | 0 | | | | |
| Roof Ceiling Assembly | | 0 | 0 | | | | |
| Columns Supporting Roof | | 0 | 0 | | | | |
| Shaft Enclosures - Exit | | N/A | N/A | | | | |
| Shaft Enclosures - Other | | N/A | N/A | | | | |
| Corridor Separation | | N/A | N/A | | | | |
| Occupancy/Fire Barrier Separation | | N/A | N/A | | | | |
| Party/Fire Wall Separation | | N/A | N/A | | | | |
| Smoke Barrier Separation | | N/A | N/A | | | | |
| Smoke Partition | | N/A | N/A | | | | |
| Tenant/Dwelling Unit/ Sleeping Unit Separation | | N/A | N/A | | | | |
| Incidental Use Separation | | N/A | N/A | | | | |

* Indicate section number permitting reduction



### PERCENTAGE OF WALL OPENING CALCULATIONS

| FIRE SEPARATION DISTANCE (FEET) FROM PROPERTY LINES | DEGREE OF OPENINGS PROTECTION (TABLE 705.8) | ALLOWABLE AREA (%) | ACTUAL SHOWN ON PLANS (%) |
|---|---|---|---|
| N/A | | | |
| | | | |
| | | | |

### LIFE SAFETY SYSTEM REQUIREMENTS

Emergency Lighting: Yes
Exit Signs: Yes
Fire Alarm: Yes
Smoke Detection Systems: Yes
Carbon Monoxide Detection: Yes

### LIFE SAFETY PLAN REQUIREMENTS

Life Safety Plan Sheet #: 1.00

- ☐ Fire and/or smoke rated wall locations (Chapter 7)
- ☐ Assumed and real property line locations (if not on the site plan)
- ☐ Exterior wall opening area with respect to distance to assumed property lines (705.8)
- ☒ Occupancy Use for each area as it relates to occupant load calculation (Table 1004.1.2)
- ☒ Occupant loads for each area
- ☒ Exit access travel distances (1017)
- ☐ Common path of travel distances (Tables 1006.2.1 & 1006.3.2(1))
- ☐ Dead end lengths (1020.4)
- ☒ Clear exit widths for each exit door
- ☒ Maximum calculated occupant load capacity each exit door can accommodate based on egress width (1005.3)
- ☒ Actual occupant load for each exit door
- ☐ A separate schematic plan indicating where fire rated floor/ceiling and/or roof structure is provided for purposes of occupancy separation
- ☐ Location of doors with panic hardware (1010.1.10)
- ☐ Location of doors with delayed egress locks and the amount of delay (1010.1.9.7)
- ☐ Location of doors with electromagnetic egress locks (1010.1.9.9)
- ☐ Location of doors equipped with hold-open devices
- ☐ Location of emergency escape windows (1030)
- ☐ The square footage of each fire area (202)
- ☐ The square footage of each smoke compartment for Occupancy Classification I-2 (407.5)
- ☐ Note any code exceptions or table notes that may have been utilized regarding the items above



### ACCESSIBLE DWELLING UNITS
(SECTION 1107)

| TOTAL UNITS | ACCESSIBLE UNITS REQUIRED | ACCESSIBLE UNITS PROVIDED | TYPE A UNITS REQUIRED | TYPE A UNITS PROVIDED | TYPE B UNITS REQUIRED | TYPE B UNITS PROVIDED | TOTAL ACCESSIBLE UNITS PROVIDED |
|---|---|---|---|---|---|---|---|
| n/a | | | | | | | |

### ACCESSIBLE PARKING
(SECTION 1106)

| LOT OR PARKING AREA | TOTAL # OF PARKING SPACES REQUIRED | TOTAL # OF PARKING SPACES PROVIDED | # OF ACCESSIBLE SPACES PROVIDED: REGULAR WITH 5' ACCESS AISLE | VAN SPACES WITH 132" ACCESS AISLE | VAN SPACES WITH 8' ACCESS AISLE | TOTAL # ACCESSIBLE PROVIDED |
|---|---|---|---|---|---|---|
| EXISTING | | | | | | |
| | | | | | | |
| TOTAL | | | | | | |

### PLUMBING FIXTURE REQUIREMENTS
(TABLE 2902.1)

| USE | | WATERCLOSETS MALE | WATERCLOSETS FEMALE | WATERCLOSETS UNISEX | URINALS | LAVATORIES MALE | LAVATORIES FEMALE | LAVATORIES UNISEX | SHOWERS /TUBS | DRINKING FOUNTAINS REGULAR | DRINKING FOUNTAINS ACCESSIBLE |
|---|---|---|---|---|---|---|---|---|---|---|---|
| SPACE | EXIST'G | - | - | - | - | - | - | - | - | - | - |
| | NEW | - | - | - | - | - | - | - | - | - | - |
| | REQ'D | - | - | - | - | - | - | - | - | - | - |

### SPECIAL APPROVALS

**Special approval:** (Local Jurisdiction, Department of Insurance, OSC, DPI, DHHS, etc., describe below)

### ENERGY SUMMARY

**ENERGY REQUIREMENTS:**
The following data shall be considered minimum and any special attribute required to meet the energy code shall also be provided. Each Designer shall furnish the required portions of the project information for the plan data sheet. If performance method, state the annual energy cost for the standard reference design vs annual energy cost for the proposed design.

**Existing building envelope complies with code:** Yes (The remainder of this section is not applicable)

**Exempt Building:** Select one Provide code or statutory reference:

**Climate Zone:** 3A

**Method of Compliance:** Energy Code - Prescriptive
(If "Other" specify source here) EXISTING BUILDING



**THERMAL ENVELOPE** (Prescriptive method only) – **Information Below for New Addition**

**Roof/ceiling Assembly** (each assembly)
Description of assembly: Single Ply Membrane over Insulation over deck
U-Value of total assembly: 0.039
R-Value of insulation: 25
Skylights in each assembly: n/a
U-Value of skylight: n/a
total square footage of skylights in each assembly: n/a

**Exterior Walls** (each assembly)
Description of assembly: Solid 8" CMU / No furring / Insulation & Thin Brick Facade
U-Value of total assembly: 0.069
R-Value of insulation: 12.5
Openings (windows or doors with glazing)
U-Value of assembly: 0.24
Solar heat gain coefficient: 0.39
projection factor: 0
Door R-Values: 4

**Exterior Walls** (each assembly)
Description of assembly: Metal studs 16" O.C. with Furring / Insulation & Thin Brick Facade
U-Value of total assembly: 0.065
R-Value of insulation: 12.5
Openings (windows or doors with glazing)
U-Value of assembly: n/a
Solar heat gain coefficient: n/a
projection factor: n/a
Door R-Values: n/a

**Floors slab on grade**
Description of assembly: Slab on Grade – Unheated Vertical Insulation
U-Value of total assembly: n/a
R-Value of insulation: 12.5
Horizontal/vertical requirement: Vertical
slab heated: N/A

**STRUCTURAL DESIGN SUMMARY – SEE STRUCTURAL SHEET**

**MECHANICAL DESIGN SUMMARY – SEE MECHANICAL SHEET**

**ELECTRICAL DESIGN SUMMARY – SEE ELECTRICAL SHEET**



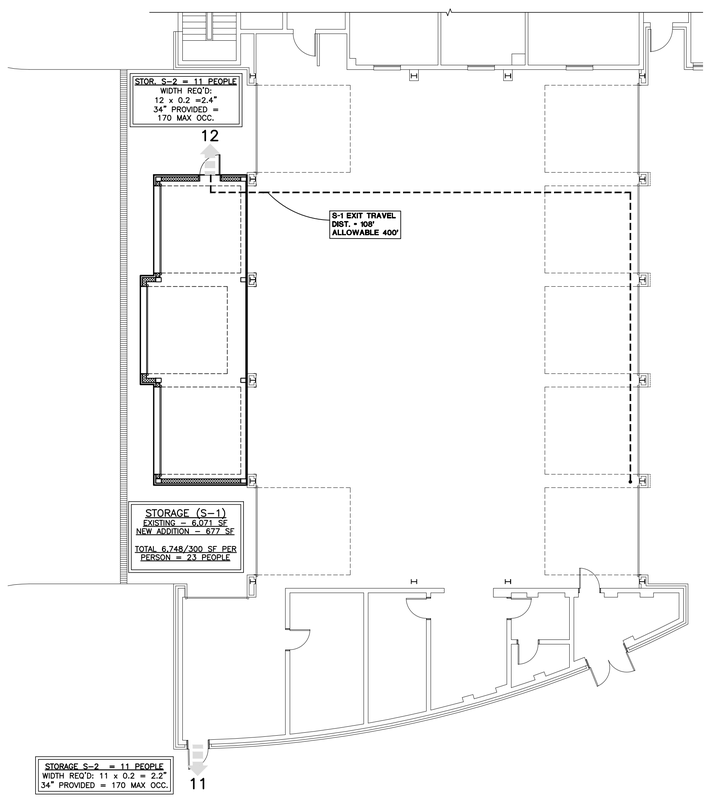


1 **LIFE SAFETY PARTIAL PLAN - APPARATUS BAY**
SCALE: 3/32"=1'-0"

## KEY PLAN

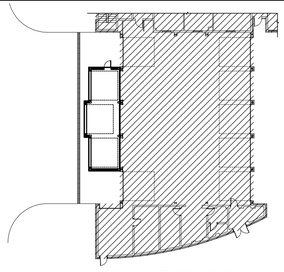

PARTIAL FLOOR PLAN
APPARATUS BAYS

## OCCUPANCY CLASS & KEY

- STORAGE (S-2) 6,072 SQ. FT. (EXISTING)
- STORAGE (S-2) 667 SQ. FT. (NEW ADDITION)

Project No.
1667

Date Printed: 11.12.2020
Drawn by: IS/JJ
Checked by: JRS
Revisions

© STEWART-COOPER-NEWELL ARCHITECTS, P.A.

THIS DRAWING IS THE PROPERTY OF STEWART-COOPER-NEWELL ARCHITECTS, P.A. AND IS SUBJECT TO FEDERAL COPYRIGHT LAWS. THIS DRAWING MAY NOT BE REPRODUCED, PUBLISHED OR USED IN ANY WAY WITHOUT THE WRITTEN PERMISSION OF STEWART-COOPER-NEWELL ARCHITECTS, P.A.

STEWART-COOPER-NEWELL ARCHITECTS, P.A. REGISTERED ARCHITECTURAL CORPORATION LIC. NO. 51313 NORTH CAROLINA GASTONIA N.C.

Stewart · Cooper · Newell Architects
719 East Second Avenue
Gastonia, NC 28054
Phone: 704.865.6311
Fax: 704.865.0046
www.scn-architects.com
1.800.671.0621

JAMES ROBERT STUMBO REGISTERED ARCHITECT 5728 10/21/2020 NORTH CAROLINA HICKORY N. C.

BAY EXPANSION FOR
GREENVILLE FIRE RESCUE #1
GREENVILLE, NC

BUILDING CODE (APPENDIX B)
LIFE SAFETY PARTIAL PLAN

Sheet No.
1.00

## GENERAL NOTES:

1. THE STRUCTURAL DRAWINGS SHALL BE USED IN CONJUNCTION WITH THE ARCHITECTURAL, CIVIL, MECHANICAL, PLUMBING AND ELECTRICAL DRAWINGS AND THE SPECIFICATIONS. THE CONTRACTOR SHALL VERIFY THE REQUIREMENTS OF OTHER TRADES AS TO SLEEVES, CHASES, HANGERS, INSERTS, ANCHORS, HOLES AND ADDITIONAL ITEMS TO BE PLACED OR SET IN THE STRUCTURAL WORK.

2. THIS STRUCTURE HAS BEEN DESIGNED IN ACCORDANCE WITH THE PROVISIONS OF THE NORTH CAROLINA STATE BUILDING CODE, 2018 EDITION.

3. THE WORK OUTLINED IN SPECIFICATION SECTION 014100 IS SUBJECT TO SPECIAL INSPECTIONS AS DESCRIBED IN THE BUILDING CODE.

4. THE CONTRACTOR SHALL PROVIDE TEMPORARY SHORING AND BRACING REQUIRED TO ERECT AND HOLD THE STRUCTURE IN PROPER ALIGNMENT UNTIL PERMANENT SUPPORTS AND LATERAL BRACING ARE IN PLACE.

5. PORTIONS OF THE STRUCTURE NOT ALTERED AND NOT AFFECTED BY THE ALTERATION HAVE NOT BEEN REVIEWED FOR COMPLIANCE WITH THE CODE REQUIREMENTS FOR A NEW STRUCTURE.

6. BEFORE PROCEEDING WITH WORK WITHIN THE EXISTING STRUCTURE , THE CONTRACTOR SHALL BECOME FAMILIAR WITH THE EXISTING STRUCTURAL CONDITIONS. ANY SHORING OR BRACING SHOWN IS A PARTIAL AND SCHEMATIC REPRESENTATION OF THAT REQUIRED. THE CONTRACTOR SHALL BE SOLELY RESPONSIBLE FOR THE DESIGN AND ERECTION OF ANY AND ALL SAFEGUARDS NECESSARY TO PROTECT THE EXISTING STRUCTURE. THE CONTRACTOR SHALL PROVIDE SHORING, BRACING AND OTHER SAFEGUARDS TO MAINTAIN ALL PARTS OF THE STRUCTURE IN A SAFE CONDITION AT ALL TIMES DURING THE PROCESS OF DEMOLITION AND CONSTRUCTION.

7. THE CONTRACTOR SHALL FIELD VERIFY THE DIMENSIONS, ELEVATIONS AND OTHER REQUIREMENTS NECESSARY FOR THE PROPER CONSTRUCTION AND ALIGNMENT OF THE NEW PORTIONS OF THE STRUCTURE TO THE EXISTING. ANY DIMENSIONS SHOWN OF EXISTING STRUCTURES SHALL BE CONSIDERED AS APPROXIMATE AND ADEQUATE FOR BIDDING PURPOSES ONLY. THE CONTRACTOR SHALL MAKE ALL MEASUREMENTS NECESSARY FOR THE FABRICATION AND ERECTION OF STRUCTURAL MEMBERS. DISCREPANCIES SHALL BE BROUGHT TO THE ATTENTION OF THE ARCHITECT.

8. DESIGN CRITERIA:

CLASSIFICATION OF BUILDING
- RISK CATEGORY . . . . . IV .

SUPER IMPOSED ROOF DEAD LOADS - UNIFORM:
- 1 1/2" INSULATION AND ROOF MEMBRANE . . . . . .3 PSF
- METAL DECK . . . . . .2 PSF
- SPRINKLERS . . . . . .3 PSF
- DUCTS, LIGHTS, MISC. MECHANICAL . . . . . .5 PSF
- TOTAL SUPER IMPOSED DEAD LOAD ON ROOF . . . . . .13 PSF

LIVE LOADS - UNIFORM:
- SLAB ON GRADE . . . . . .500 PSF
- ROOF . . . . . 20 PSF

LIVE LOADS - CONCENTRATED:
- ROOFS . . . . . .300#

UNLESS OTHERWISE NOTED, CONCENTRATED LOADS ARE APPLIED UNIFORMLY OVER 2'-6"x2'-6" AREA.

SNOW LOADS:
- GROUND SNOW LOAD . . . . . 10 PSF
- FLAT ROOF LOAD . . . . . 14 PSF
- IMPORTANCE FACTOR (Is) . . . . . .1.2
- THERMAL FACTOR (Ct) . . . . . .1.0
- EXPOSURE FACTOR (Ce) . . . . . 1.0
- DRIFT SURCHARGE (Pd) . . . . . REF TABLE

| SNOW DRIFT SCHEDULE | | |
|---|---|---|
| Pd @ 0 PSF, W | DRIFT VALUES | |
| | W | Pd |
| ① | 7.5 FT | 28 PSF |

NOTE: SNOW DRIFT LOADS ARE IN ADDITION TO FLAT ROOF LOADS.

WIND LOADS:
- ULTIMATE DESIGN WIND SPEED ($V_{ULT}$) . . . . . .130 MPH
- EXPOSURE CATEGORY . . . . . .B
- INTERNAL PRESSURE COEFFICIENT . . . . . ±0.18
- COMPONENT AND CLADDING PRESSURES:
  - WALLS, ZONE 5 (10 SF) . . . . . 48 PSF
  - ROOF, ZONE 3 (10 SF) . . . . . 97 PSF
  - PARAPET, END/CORNER (10 SF) . . . . .117 PSF
- ULTIMATE WIND BASE SHEARS (FOR MWFRS):
  - $V_X$ . . . . . 40 KIPS
  - $V_Y$ . . . . . 14 KIPS

SEISMIC LOADS:
- SITE CLASSIFICATION . . . . . .D
- SEISMIC DESIGN CATEGORY . . . . . C
- IMPORTANCE FACTOR ($I_E$) . . . . . .1.5
- SPECTRAL RESPONSE ACCELERATIONS:
  - $S_S$ . . . . . 0.124 $S_1$ . . . . . .0.063
  - $S_{MS}$ . . . . . 0.198 $S_{M1}$ . . . . . .0.15
  - $S_{DS}$ . . . . . 0.132 $S_{D1}$ . . . . . .0.1
- ANALYSIS PROCEDURE: . . . . .EQUIVALENT LATERAL FORCE
- LATERAL FORCE RESISTING SYSTEM . . . . STEEL SYSTEMS NOT SPECIFICALLY DETAILED FOR SEISMIC RESISTANCE
- RESPONSE MODIFICATION COEFFICIENT (R) . . . . . 3.0
- SEISMIC RESPONSE COEFFICIENT ($C_S$) . . . . . .0.066
- ULTIMATE SEISMIC BASE SHEAR (V) . . . . . .6 KIPS

## FOUNDATION NOTES:

1. FOUNDATIONS HAVE BEEN DESIGNED IN ACCORDANCE WITH THE RECOMMENDATIONS IN THE GEOTECHNICAL ENGINEERING REPORT PREPARED BY TERRACON, DATED OCTOBER 9, 2020.

2. FOUNDATIONS HAVE BEEN DESIGNED FOR A NET ALLOWABLE SOIL BEARING PRESSURE OF 2,000 PSF.

3. PRIOR TO PLACING FOUNDATION CONCRETE, ALL FOUNDATION EXCAVATIONS SHALL BE INSPECTED BY THE SPECIAL INSPECTOR TO EXPLORE THE EXTENT OF LOOSE, SOFT, EXPANSIVE, OR OTHERWISE UNSATISFACTORY SOIL MATERIAL AND TO VERIFY DESIGN BEARING PRESSURE. DIRECTION FOR CORRECTIVE ACTION WILL BE PROVIDED BY THE SPECIAL INSPECTOR WHERE REQUIRED.

4. THE CONTRACTOR SHALL BE SOLELY RESPONSIBLE FOR CONTROL OF GROUNDWATER AND SURFACE RUNOFF THROUGHOUT THE CONSTRUCTION PROCESS. INUNDATION AND LONG TERM EXPOSURE OF BEARING SURFACES WHICH RESULT IN DETERIORATION OF BEARING SHALL BE PREVENTED.

## CAST-IN-PLACE CONCRETE NOTES:

1. CONCRETE SHALL BE IN ACCORDANCE WITH AMERICAN CONCRETE INSTITUTE (ACI) 301 AND 318.

2. CONCRETE SHALL BE NORMAL WEIGHT AND SHALL OBTAIN 28 DAY COMPRESSIVE STRENGTHS AS FOLLOWS:
   - A. SLAB-ON-GRADE . . . . . .3,500 PSI
   - B. CONCRETE NOT OTHERWISE NOTED . . . . . .3,000 PSI

3. REINFORCING MATERIALS SHALL BE AS FOLLOWS:
   - A. REINFORCING BARS - ASTM A 615, GRADE 60, DEFORMED.

4. ALL REINFORCING BARS AND EMBEDDED ITEMS SUCH AS ANCHOR RODS AND WELD PLATES SHALL BE ACCURATELY PLACED AND ADEQUATELY TIED AND SUPPORTED BEFORE CONCRETE IS PLACED TO PREVENT DISPLACEMENT BEYOND PERMITTED TOLERANCES.

5. CONCRETE COVER TO REINFORCING BARS SHALL NOT EXCEED THE MINIMUM COVER RECOMMENDATIONS IN ACI 318, UNLESS THE DRAWINGS SHOW GREATER COVER REQUIREMENTS.

6. LAP CONTINUOUS REINFORCING BARS 57 X BAR DIAMETER, TYPICAL UNLESS OTHERWISE NOTED.

## STRUCTURAL STEEL NOTES:

1. STRUCTURAL STEEL SHALL BE IN ACCORDANCE WITH THE AMERICAN INSTITUTE OF STEEL CONSTRUCTION (AISC) 360.

2. STRUCTURAL STEEL SHALL COMPLY WITH THE FOLLOWING SPECIFICATIONS:
   - A. STRUCTURAL STEEL SHAPES, PLATES AND BARS UNLESS OTHERWISE NOTED - ASTM A 36, Fy = 36 KSI
   - B. STRUCTURAL STEEL W - SHAPES - ASTM A 992, Fy = 50 KSI
   - C. HOLLOW STRUCTURAL SECTIONS (HSS):
   - D. SQUARE AND RECTANGULAR - ASTM A 500, GRADE C, Fy = 50 KSI ANCHOR RODS - ASTM F 1554, GRADE 36
   - E. HIGH STRENGTH BOLTS - ASTM A325 (TYPICAL UON)
   - F. FULLY PRETENSIONED BOLTS ASTM F1852 ( TWIST-OFF TYPE)
   - G. WASHERS - ASTM F 436
   - H. NUTS - ASTM A 563

3. UNLESS OTHERWISE NOTED , ALL REQUIRED DESIGN STRENGTHS AND REACTIONS INDICATED ARE BASED ON THE " LOADING COMBINATIONS USING STRENGTH DESIGN OR LOAD AND RESISTANCE FACTOR DESIGN " PER SECTION 1605.2 OF THE BUILDING CODE.

4. UNLESS OTHERWISE NOTED , BEAM CONNECTIONS SHALL BE " AISC SIMPLE SHEAR CONNECTIONS " WITH ASTM A325 BOLTS. DESIGN CONNECTIONS FOR THE REACTIONS ( LRFD FACTORED LOADING ) SHOWN ON THE DRAWINGS AND THE MINIMUM NUMBER OF BOLTS SHOWN BELOW. IF NO REACTION IS SHOWN, DESIGN CONNECTIONS FOR REACTIONS AND THE MINIMUM NUMBER OF BOLTS SHOWN BELOW.

| BEAM SIZE | DESIGN REACTION (LRFD) | MIN # OF BOLTS |
|---|---|---|
| W10 | 20 KIPS | 2 |
| W14 | 35 KIPS | 3 |

4A. WIDE FLANGE BEAMS INDICATED AS MOMENT CONNECTIONS MUST BE DESIGN FOR THE MOMENTS (LRFD FACTORED LOADING) INDICATED ON PLAN AND FOR THE SHEARS IN ACCORDANCE WITH THE ABOVE TABLE.

5. HIGH STRENGTH BOLTS MAY BE TIGHTENED TO THE "SNUG TIGHT" CONDITION IN LIEU OF FULL PRETENSIONING, EXCEPT FOR THE FOLLOWING CONNECTIONS WHICH SHALL BE FULLY PRETENSIONED:
   - A. ALL FRAMING CONNECTIONS AT MOMENT FRAMES.

5A. FOR STRUCTURAL STEEL CONNECTIONS INDICATED AS "DELEGATED DESIGN", INCLUDE STRUCTURAL CALCULATIONS SIGNED AND SEALED BY THE QUALIFIED PROFESSIONAL ENGINEER REGISTERED IN THE STATE OF NORTH CAROLINA RESPONSIBLE FOR THEIR PREPARATION. IN ADDITION, THE PROFESSIONAL ENGINEER RESPONSIBLE FOR CONNECTION DESIGN SHALL REVIEW THE SHOP DRAWINGS PRIOR TO SUBMITTAL TO VERIFY THAT THE CONNECTIONS AS DETAILED ON THE SHOP DRAWINGS COMPLY WITH THE CONNECTION DESIGN REQUIREMENTS OF THE FINAL CALCULATIONS. A REVIEW LETTER, SIGNED AND SEALED BY THE PROFESSIONAL ENGINEER RESPONSIBLE FOR CONNECTION DESIGN SHALL BE PROVIDED WITH THE SHOP DRAWINGS AND CALCULATION SUBMITTAL STATING THAT THIS REVIEW AND VERIFICATION HAS BEEN COMPLETED.

## STRUCTURAL STEEL NOTES CONTINUED:

6. REFER TO THE SPECIFICATIONS FOR REQUIREMENTS OF "DELEGATED DESIGN" CONNECTIONS.

   DELEGATED DESIGN CONNECTIONS ARE AS FOLLOWS:
   - A. MOMENT FRAMES.
   - B. SHEAR CONNECTIONS

8 PROVIDE ANGLE FRAMING AROUND OPENINGS LARGER THAN 6 INCHES IN ANY DIMENSION (INCLUDING ROOF DRAINS) TO SUPPORT STEEL DECK, TYPICAL UNLESS OTHERWISE NOTED OR DETAILED AS FOLLOWS:

| JOIST/BEAM SPACING | ANGLE SIZE |
|---|---|
| TO 6'-0" | L3x3x1/4 |

5. WELDING SHALL BE IN ACCORDANCE WITH AWS D1.1, "STRUCTURAL WELDING CODE - STEEL." WELD ELECTRODES SHALL BE E70XX LOW HYDROGEN. UNLESS OTHERWISE NOTED, PROVIDE CONTINUOUS FILLET WELDS WITH MINIMUM SIZE REQUIRED BY TABLE J2.4 AISC 360.

10. COORDINATE ALL MEMBER LOCATIONS, UNIT WEIGHTS, OPENING SIZES AND CURB DIMENSIONS FOR MECHANICAL EQUIPMENT WITH THE ACTUAL EQUIPMENT FURNISHED.

11. STRUCTURAL STEEL SCHEDULED TO RECEIVE SPRAYED-ON FIREPROOFING SHALL NOT BE PRIME PAINTED.

12. HOT DIP GALVANIZE AFTER FABRICATION THE FOLLOWING:
   - A. ANGLES AND PLATES SUPPORTING MASONRY IN EXTERIOR WALLS.
   - B. LINTELS AND LINTEL ASSEMBLIES SUPPORTING MASONRY IN EXTERIOR WALLS.
   - C. ALL STEEL EXPOSED TO WEATHER IN THE FINAL CONSTRUCTION. ITEMS IDENTIFIED AS GALVANIZED ON ARCHITECTURAL OR STRUCTURAL DRAWINGS.

13. STEEL MEMBERS SHALL BE SPLICED ONLY WHERE INDICATED. CONTINUOUS MEMBERS SHALL BE SPLICED OVER SUPPORTS, UNLESS OTHERWISE NOTED.

## STEEL DECK NOTES:

1. STEEL DECK SHALL BE IN ACCORDANCE WITH THE AMERICAN IRON AND STEEL INSTITUTE (AISI), "NORTH AMERICAN SPECIFICATION FOR THE DESIGN OF COLD-FORMED STEEL STRUCTURAL MEMBERS" AND THE STEEL DECK INSTITUTE (SDI), "DESIGN MANUAL FOR COMPOSITE DECKS, FORM DECKS, AND ROOF DECKS."

2. STEEL DECK INSTALLATION SHALL COMPLY WITH THE FOLLOWING:
   - A. ROOF DECK: 1½" x 22 GAGE TYPE B GALVANIZED. UNLESS OTHERWISE NOTED, ATTACH DECK TO SUPPORTS WITH ⅝ INCH DIAMETER PUDDLE WELDS WITH A 36/4 PATTERN. FASTEN SIDE LAPS WITH 5-#10 SELF-TAPPING HEX HEAD SCREWS BETWEEN SUPPORTS. FASTEN EDGEMOST DECK PANEL TO STEEL FRAMING WITH ⅝ INCH DIAMETER PUDDLE WELDS AT SAME SPACING AS SIDELAP FASTENERS.

3. STEEL DECK SHALL BE INSTALLED PERPENDICULAR TO SUPPORTS AND SHALL HAVE A MINIMUM OF THREE CONTINUOUS SPANS. ENDLAPS SHALL ONLY OCCUR AT SUPPORTS.

4. WELDING SHALL BE IN ACCORDANCE WITH AWS D1.3 "STRUCTURAL WELDING CODE - SHEET STEEL".

5. PERMANENT SUSPENDED LOADS SHALL NOT BE SUPPORTED BY STEEL ROOF DECK.

6. STEEL DECK SCHEDULED TO RECEIVE SPRAYED-ON FIREPROOFING SHALL BE GALVANIZED.

## SPECIALTY STRUCTURAL ELEMENTS:

1. THE FOLLOWING BUILDING ELEMENTS REQUIRE DELEGATED DESIGN AND ENGINEERING BY A SPECIALTY STRUCTURAL ENGINEER:
   - A. STEEL SHEAR AND MOMENT CONNECTIONS.
   - B. COLD FORMED METAL FRAMING.

   REFER TO SPECIFICATIONS FOR COMPLETE REQUIREMENTS.

2. SUBMIT COMPLETE CALCULATIONS AND SHOP DRAWINGS, SIGNED AND SEALED BY THE PROFESSIONAL ENGINEER REGISTERED IN THE STATE OF NORTH CAROLINA RESPONSIBLE FOR THE DESIGN, INCLUDING DESIGN LOADINGS AND REACTIONS APPLIED TO THE SUPPORTING STRUCTURE. INCLUDE A SUMMARY OF THE CONTROLLING LOAD CASES FOR EACH LOCATION.

3. IN ADDITION TO THEIR OWN DEAD WEIGHT AND THE DEAD LOADS SHOWN OR INDICATED IN THE DRAWINGS, MEMBERS SHALL BE DESIGNED TO SUPPORT THE LOADS INDICATED IN THE GENERAL NOTES.

4. CONNECTION DETAILS SHOWN ARE SCHEMATIC ONLY. ALL CONNECTIONS SHALL BE DEVELOPED BY THE MANUFACTURER TO SUIT THE SPECIFIED LOADS. CONNECTIONS SHALL ACCOUNT FOR THERMAL MOVEMENT, DEFLECTION AND CREEP. DETAIL ALL CONNECTIONS ON SHOP DRAWINGS.

5. THE CONTRACTOR SHALL BE RESPONSIBLE FOR THE COORDINATION OF ALL SPECIALTY STRUCTURAL ELEMENTS AND COST ASSOCIATED WITH A CONTRACTOR INITIATED CHANGE IN BUILDING STRUCTURE, INCLUDING CONSTRUCTION COSTS AND RE-ENGINEERING COSTS.

## POST-INSTALLED ANCHOR NOTES:

1. ALL POST INSTALLED ANCHORS INDICATED ON THE DRAWINGS ARE BY HILTI, INC, AND SHALL BE CONSIDERED THE BASIS OF DESIGN PRODUCT. WHERE NOT EXPLICITLY INDICATED IN THE DRAWINGS, THE FOLLOWING ANCHORS/ADHESIVES SHALL BE USED:
   - A. ANCHORAGE TO CONCRETE
     - i. ADHESIVE ANCHORS FOR CRACKED AND UNCRACKED CONCRETE USE:
       - (1) HILTI HIT-HY 200 SAFE SET SYSTEM WITH HILTI HOLLOW DRILL BIT (TE-CD OR TE-YD) AND VC 20/40 VACUUM SYSTEM (VC 20-U OR VC 40U) WITH STEEL THREADED ROD PER ICC ESR-3187
     - ii. SCREW ANCHORS FOR CRACKED AND UNCRACKED CONCRETE USE:
       - (1) HILTI KWIK HUS EZ SCREW ANCHORS PER ICC ESR-3027
   - B. REBAR DOWELING INTO CONCRETE
     - i. ADHESIVE ANCHORS FOR CRACKED AND UNCRACKED CONCRETE USE:
       - (1) HILTI HIT-HY 200 SAFE SET SYSTEM WITH HILTI HOLLOW DRILL BIT (TE-CD OR TE-YD) AND VC 20/40 VACUUM SYSTEM (VC 20-U OR VC 40-U) WITH CONTINUOUSLY DEFORMED REBAR PER ICC ESR-3187
   - C. ANCHORAGE TO SOLID GROUTED MASONRY
     - i. ADHESIVE ANCHORS USE:
       - (1) HILTI HIT-HY 70 MASONRY ADHESIVE ANCHORING SYSTEM (ICC PENDING).
       - (2) STEEL ANCHOR ELEMENT SHALL BE HILTI HAS-E CONTINUOUSLY THREADED ROD
     - ii. MECHANICAL ANCHORS USE:
       - (1) HILTI KWIK HUS EZ SCREW ANCHORS PER ICC ESR 3056
   - D. ANCHORAGE TO HOLLOW / MULTI-WY THE MASONRY
     - i. ADHESIVE ANCHORS USE:
       - (1) HILTI HIT-HY 70 MASONRY ADHESIVE ANCHORING SYSTEM PER ICCESR-3342.
       - (2) STEEL ANCHOR ELEMENT SHALL BE HILTI HAS-E CONTINUOUSLY THREADED ROD OR CONTINUOUSLY DEFORMED STEEL REBAR
       - (3) THE APPROPRIATE SIZE SCREEN TUBE SHALL BE USED PER ADHESIVE MANUFACTURER'S RECOMMENDATION

2. ALTERNATE POST INSTALLED ANCHOR PRODUCTS MAY BE SUBMITTED TO THE ENGINEER FOR REVIEW AND POSSIBLE APPROVAL. ALL SUBSTITUTION REQUESTS SHALL BE ACCOMPANIED BY AN ICC ESR SHOWING COMPLIANCE WITH THE RELEVANT BUILDING CODE FOR SEISMIC USES, LOAD RESISTANCE, INSTALLATION CATEGORY, AND COMPREHENSIVE INSTALLATION INSTRUCTIONS. ADHESIVE ANCHOR EVALUATION WILL ALSO CONSIDER CREEP, IN-SERVICE TEMPERATURE AND INSTALLATION TEMPERATURE. ALTERNATE PRODUCTS MAY REQUIRE MODIFICATIONS TO ANCHOR DIAMETER, SPACING, AND EMBEDMENT.

3. INSTALL ANCHORS PER THE MANUFACTURER INSTRUCTIONS, AS INCLUDED IN THE ANCHOR PACKAGING.

4. THE CONTRACTOR SHALL ARRANGE AN ANCHOR MANUFACTURER'S REPRESENTATIVE TO PROVIDE ONSITE INSTALLATION TRAINING FOR ALL OF THEIR ANCHORING PRODUCTS SPECIFIED. THE STRUCTURAL ENGINEER OF RECORD MUST RECEIVE DOCUMENTED CONFIRMATION THAT ALL OF THE CONTRACTOR'S PERSONNEL WHO INSTALL ANCHORS ARE TRAINED PRIOR TO THE COMMENCEMENT OF INSTALLING ANCHORS.

5. ANCHOR CAPACITY IS DEPENDANT UPON SPACING BETWEEN ADJACENT ANCHORS AND PROXIMITY OF ANCHORS TO EDGE OF CONCRETE. INSTALL ANCHORS IN ACCORDANCE WITH SPACING AND EDGE CLEARANCES INDICATED ON THE DRAWINGS.

6. EXISTING REINFORCING BARS IN THE CONCRETE STRUCTURE MAY CONFLICT WITH SPECIFIC ANCHOR LOCATIONS. UNLESS NOTED ON THE DRAWINGS THAT THE BARS CAN BE CUT, THE CONTRACTOR SHALL LOCATE THE POSITION OF THE REINFORCING BARS AT THE LOCATIONS OF THE CONCRETE ANCHORS, BY FERROSCAN OR GPR.

7. ALL POST INSTALLED ANCHORS REQUIRE CONTINUOUS SPECIAL INSPECTIONS TO VERIFY INSTALLATION HAS BEEN PERFORMED IN ACCORDANCE WITH THE MANUFACTURER'S WRITTEN INSTRUCTIONS. REFERENCE THE STATEMENT AND SCHEDULE OF SPECIAL INSPECTIONS FOR ADDITIONAL INFORMATION.

GENERAL NOTES

[redacted]


lynchmykins
CALCULATE. COLLABORATE. CREATE.
Structural Engineers
301 N West St., Ste 105
Raleigh, NC 27603
919.782.1833 - lynchmykins.com


Project No. 1667

Date: 11/12/2020
Drawn by: SSO
Checked by: DPD
Revisions

© STEWART·COOPER·NEWELL ARCHITECTS, P.A.

[redacted]

NORTH CAROLINA PROFESSIONAL ENGINEERING FIRM C-4360 LYNCHMYKINS STRUCTURAL ENGINEERS, PC


Stewart·Cooper·Newell Architects
719 East Second Avenue
Gastonia, NC 28054
Phone: 704.865.6311
Fax: 704.865.0046
1.800.671.0621
www.scn-architects.com


NORTH CAROLINA PROFESSIONAL SEAL 040415 ENGINEER DANIEL P. DONECKER
11/12/20

BAY EXPANSION FOR GREENVILLE FIRE RESCUE #1
GREENVILLE, NC

GENERAL NOTES

Sheet No. S0.01

## ABBREVIATIONS:

| | |
|---|---|
| ARCH | ARCHITECT |
| BD | BAR DIAMETER |
| BLDG | BUILDING |
| BM | BEAM |
| BOD | BOTTOM OF DECK |
| BOS | BOTTOM OF STEEL |
| BOT, B | BOTTOM |
| BTWN | BETWEEN |
| C TO C | CENTER TO CENTER |
| CJ | CONTROL JOINT |
| CL | CENTERLINE |
| CLR | CLEAR |
| CMU | CONCRETE MASONRY UNIT |
| COL | COLUMN |
| CONC | CONCRETE |
| CONN | CONNECTION |
| CONSTR | CONSTRUCTION |
| CONT | CONTINUOUS |
| COORD | COORDINATE |
| CTR | CENTER |
| CTRD | CENTERED |
| DCJ | DOWELED CONSTRUCTION JOINT |
| DIA | DIAMETER |
| DJ | DOUBLE JOIST |
| DWGS | DRAWINGS |
| EA | EACH |
| EF | EACH FACE |
| EJ | EXPANSION JOINT |
| EL | ELEVATION |
| EMBED | EMBEDMENT |
| EOS | EDGE OF SLAB |
| EQ | EQUAL |
| EW | EACH WAY |
| EXIST | EXISTING |
| EXP | EXPANSION |
| EXT | EXTERIOR |
| FDN | FOUNDATION |
| FO | FACE OF |
| FOB | FACE OF BUILDING |
| FOC | FACE OF CONCRETE |
| FOM | FACE OF MASONRY |
| FOS | FACE OF SLAB/ STUD |
| FTG | FOOTING |
| GEN | GENERAL |
| H | HIGH |
| HK | HOOK |
| HORIZ | HORIZONTAL |
| HSS | HOLLOW STRUCTURAL SECTIONS |
| HT | HEIGHT |
| JBE | JOIST BEARING ELEVATION |
| JT | JOINT |
| KCJ | KEYED CONSTRUCTION JOINT |
| L | LOW |
| LLV | LONG LEG VERTICAL |
| MAS | MASONRY |
| MATL | MATERIAL |
| MAX | MAXIMUM |
| MFR | MANUFACTURER |
| MID | MIDDLE |
| MIN | MINIMUM |
| MOD | MODIFY |
| NOM | NOMINAL |
| NTS | NOT TO SCALE |
| OC | ON CENTER |
| OPH | OPPOSITE HAND |
| OPNG | OPENING |
| PL | PLATE |
| R | RADIUS |
| REF | REFERENCE, REFER TO |
| REINF | REINFORCE, REINFORCED |
| SCHED | SCHEDULE |
| SIM | SIMILAR |
| SJ | SAWED JOINT |
| SL | SLOPE |
| T&B | TOP AND BOTTOM |
| T&G | TONGUE AND GROOVE |
| THK | THICKNESS |
| TOC | TOP OF CONCRETE |
| TOF | TOP OF FOOTING |
| TOM | TOP OF MASONRY |
| TOS | TOP OF STEEL |
| TS | THICKENED SLAB |
| TYP | TYPICAL |
| UON | UNLESS OTHERWISE NOTED |
| VERT | VERTICAL |
| W/ | WITH |
| WP | WORKING POINT |
| WWR | WELDED WIRE REINFORCING |

## PLAN LEGEND:

| | | |
|---|---|---|
| TOS = XX'-XX" | = | TOP OF STEEL ELEVATION MEASURED FROM REFERENCED FINISH FIRST FLOOR ELEVATION |
| TOM = XX'-XX" | = | TOP OF MASONRY ELEVATION MEASURED FROM REFERENCED FINISH FIRST FLOOR ELEVATION |
| JBE = XX'-XX" | = | JOIST BEARING ELEVATION MEASURED FROM REFERENCED FINISH FIRST FLOOR ELEVATION |
| BOD = XX'-XX" | = | BOTTOM OF DECK ELEVATION MEASURED FROM REFERENCED FINISH FIRST FLOOR ELEVATION |
| | = | FLOOR / ROOF OPENING |
| (-X'-X") | = | TOP OF FOOTING ELEVATION MEASURED FROM REFERENCED FINISHED FIRST FLOOR ELEVATION |
| <-X'-X"> | = | TOP OF EXISTING FOOTING ELEVATION MEASURED FROM REFERENCED FINISHED FIRST FLOOR ELEVATION |
| ±X" | = | TOP OF SLAB ELEVATION - MEASURED FROM REFERENCED FINISHED FIRST FLOOR ELEVATION |
| | = | CHANGE IN ELEVATION - REF ARCH DWGS FOR DIMENSIONS |
| SL | = | DIRECTION OF SLOPE |
| | = | DOWELED CONSTRUCTION JOINT LINE ON PLAN |
| X OR X | = | PLAN KEY NOTE MARK |
| X | = | COLUMN GRID MARK |
| X / SX | = | SECTION/DETAIL NUMBER/LETTER<br>SECTION/DETAIL MARK<br>SHEET NUMBER WHERE SECTION/DETAIL IS DRAWN |
| | = | MOMENT CONNECTION |
| | = | JOIST BOTTOM CHORD EXTENSION |
| | = | BEAM BOTTOM FLANGE BRACE |
| | = | HORIZONTAL BRIDGING |
| | = | CROSS BRIDGING |
| BP-X | = | BEARING PLATE MARK |
| WFX | = | WALL FOOTING MARK |
| CFX | = | COLUMN FOOTING MARK |
| ± | = | FIELD VERIFY |
| S-X | = | SLAB MARK / SPAN DIRECTION |

BEAM SIZE — CAMBER — SHEAR REACTION (KIPS) EA END UON

W16x26 [2"] xxK / xxK-FT = BEAM NOTATION

MOMENT REACTION (KIP-FT) EA END UON

## GENERAL NOTES

[redacted]


lynchmykins
CALCULATE. COLLABORATE. CREATE.
Structural Engineers
301 N West St., Ste 105
Raleigh, NC 27603
919.782.1833 - lynchmykins.com


Project No.
1667

Date:
11/12/2020
Drawn by:
SSO
Checked by:
DPD
Revisions

© STEWART-COOPER-NEWELL ARCHITECTS, P.A.

[redacted]

NORTH CAROLINA PROFESSIONAL ENGINEERING FIRM C-4360 LYNCHMYKINS STRUCTURAL ENGINEERS, PC


Stewart·Cooper·Newell Architects
719 East Second Avenue
Gastonia, NC 28054
Phone: 704.865.6311
Fax: 704.865.0046
1.800.671.0621
www.scn-architects.com


NORTH CAROLINA PROFESSIONAL SEAL 040415 ENGINEER DANIEL P. DONECKER
11/12/20

BAY EXPANSION FOR
GREENVILLE FIRE RESCUE #1
GREENVILLE, NC

ABBREVIATIONS/PLAN LEGEND

Sheet No.
S0.02

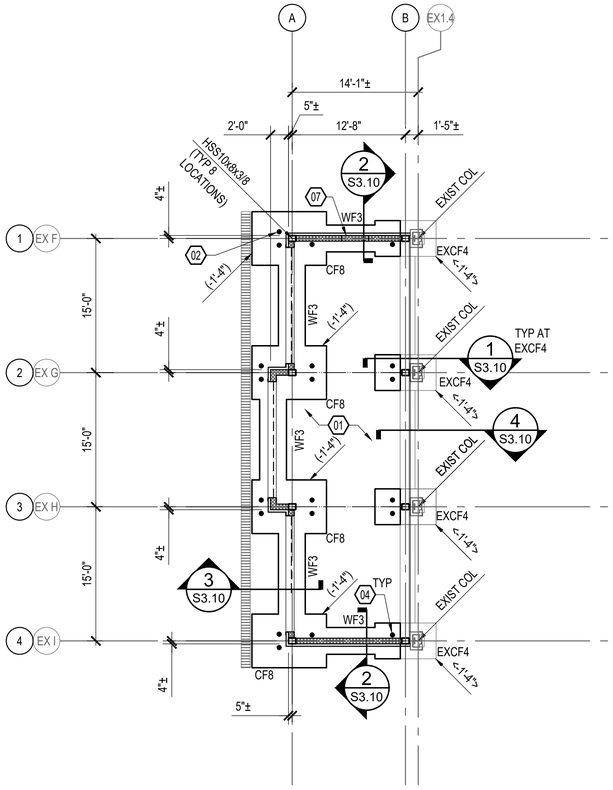


1 S1.10 FOUNDATION PLAN
1/8" = 1'-0"

lynchmykins
CALCULATE. COLLABORATE. CREATE.
Structural Engineers
301 N West St., Ste 105
Raleigh, NC 27603
919.782.1833 - lynchmykins.com

## FOUNDATION PLAN NOTES:

1. REFER TO ARCHITECTURAL DRAWINGS FOR DIMENSIONS TO NONBEARING WALLS, WALL CONTROL JOINTS, AND OPENINGS.
2. UNLESS OTHERWISE NOTED, ALL ELEVATIONS ARE BASED ON A FINISHED FIRST FLOOR REFERENCE OF 0'-0". ACTUAL FINISHED FIRST FLOOR ELEVATION IS 50'-6" ± TO MATCH EXISTING. REFER TO ARCHITECTURAL DRAWINGS FOR FINISHED FLOOR MATERIAL.
3. TOP OF ALL FOOTINGS SHALL BE AT ELEVATION -1'-4"± TO MATCH EXISTING UNLESS OTHERWISE NOTED.
4. UTILITY LOCATIONS ARE NOT SHOWN ON PLAN. THE CONTRACTOR SHALL COORDINATE THE LOCATIONS, SIZES, AND INVERTS OF UTILITIES. AT LOCATIONS WHERE UTILITIES PASS BELOW THE TOP OF FOOTING ELEVATION, STEP THE TOP OF FOOTING DOWN ON EACH SIDE PER THE "STEPPED FOOTING DETAIL" AND SLEEVE THE UTILITY THROUGH THE FOUNDATION WALL. THE CONTRACTOR MAY, AT HIS OPTION, SLEEVE THE UTILITY THROUGH THE FOUNDATION PER THE "UTILITY SLEEVE DETAIL." ALL PENETRATIONS IN MASONRY WALLS GREATER THAN 1'-4" REQUIRE A BOND BEAM LINTEL.

## SLAB-ON-GRADE PLAN NOTES:

1. SLAB ON GRADE JOINTS SHALL BE SAWED CONSTRUCTION JOINTS.
2. PLACE 1-#4 x 3'-0" IN MIDDLE OF SLAB AT REENTRANT CORNERS WHERE A SLAB CONTROL JOINT DOES NOT OCCUR.
3. FLOOR DRAINS AND FLOOR SINKS ARE NOT SHOWN ON PLAN. REFER TO PLUMBING DRAWINGS FOR QUANTITY AND LOCATION.
4. REFER TO ARCH DRAWINGS FOR EXTERIOR CONCRETE SLABS AND PAVING.

## KEYNOTES:

01 8" CONCRETE SLAB-ON-GRADE OVER VAPOR RETARDER AND 6" DEPTH OF POROUS FILL. REINFORCE WITH #4 AT 12" OC LOCATED 3" CLEAR BELOW TOP OF SLAB. MAINTAIN REINFORCEMENT IN POSITION ON BOLSTERS, CHAIRS OR SPACERS DURING CONCRETE PLACEMENT.

02 BOLLARD - REFERENCE TYPICAL DETAIL FOR ATTACHMENT TO FOOTING - REFERENCE THE ARCHITECTURAL DRAWINGS FOR EXACT LOCATION SIZE AND HEIGHT.

04 NOTCH MASONRY AROUND BASE PLATE AS REQUIRED.

07 MAN DOOR TO BE LOCATED IN CMU WALL, REF ARCH FOR LOCATION. SEE TYPICAL BOND BEAM LINTEL DETAILS FOR REINFORCING.

WALL FOOTING SCHEDULE

| MARK | SIZE | | REINFORCING | |
|---|---|---|---|---|
| | WIDTH | DEPTH | CONTINUOUS | TRANSVERSE |
| WF3 | 3'-0" | 1'-0" | 4-#5 BOT | #4 AT 48" OC BOT |

COLUMN FOOTING SCHEDULE

| MARK | SIZE | | | REINFORCING | | COMMENTS |
|---|---|---|---|---|---|---|
| | LENGTH | WIDTH | DEPTH | BOTTOM | TOP | |
| CF8 | 8'-4" | 6'-0" | 1'-0" | 10-#6 EW | 7-#6 EW | - |
| EXCF4 | 4'-0"± | 4'-0"± | 1'-0"± | - | - | EXISTING COLUMN FOOTING, VERIFY ACTUAL SIZE IN FIELD |

GENERAL NOTES

[redacted]

Project No.
1667

Date:
11/12/2020
Drawn by:
SSO
Checked by:
DPD
Revisions

© STEWART-COOPER-NEWELL ARCHITECTS, P.A.

[redacted]

NORTH CAROLINA PROFESSIONAL ENGINEERING FIRM C-4360 LYNCH MYKINS STRUCTURAL ENGINEERS, PC


Stewart·Cooper·Newell Architects
719 East Second Avenue
Gastonia, NC 28054
Phone: 704.865.6311
Fax: 704.865.0046
1.800.671.0621
www.scn-architects.com


NORTH CAROLINA PROFESSIONAL SEAL 040415 ENGINEER DANIEL P. DONECKER
11/12/20

BAY EXPANSION FOR
GREENVILLE FIRE RESCUE #1
GREENVILLE, NC

FOUNDATION PLAN

Sheet No.
S1.10

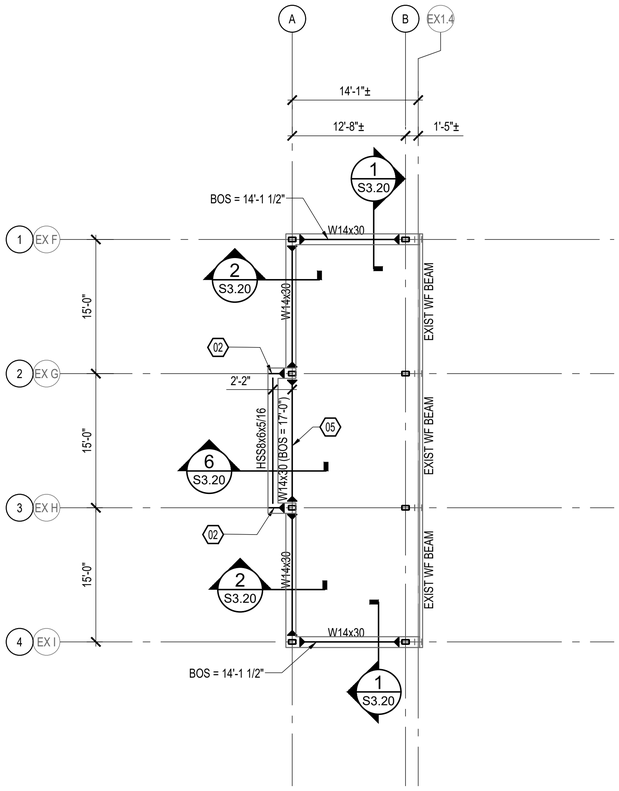


1 S1.20 LOW STEEL FRAMING PLAN
1/8" = 1'-0"

lynchmykins
CALCULATE. COLLABORATE. CREATE.
Structural Engineers
301 N West St., Ste 105
Raleigh, NC 27603
919.782.1833 - lynchmykins.com

## FRAMING PLAN NOTES:

1. REFER TO FOUNDATION PLAN AND ARCHITECTURAL DRAWINGS FOR DIMENSIONS NOT SHOWN.
2. BOTTOM OF STEEL ELEVATIONS SHALL BE AT ELEVATION 14'-0", UNLESS OTHERWISE NOTED.
3. MOMENT CONNECTIONS TO BE DESIGNED FOR 15 K-FT OF FACTORED MOMENT, UNLESS OTHERWISE NOTED, IN ADDITION TO THE SHEAR LOAD GIVEN IN THE GENERAL NOTES.

## KEYNOTES:

02 HSS OUTRIGGER. REF TYPICAL ECCENTRIC HSS BEAM TO COLUMN CONNECTION DETAILS FOR CONNECTION INFORMATION.

05 FINAL BEAM ELEVATION TO BE COORDINATED WITH GARAGE DOOR SUPPLIER.

## GENERAL NOTES

[redacted]

Project No.
1667

Date:
11/12/2020
Drawn by:
SSO
Checked by:
DPD
Revisions

© STEWART-COOPER-NEWELL ARCHITECTS, P.A.

[redacted]

NORTH CAROLINA PROFESSIONAL ENGINEERING FIRM C-4360 LYNCHMYKINS STRUCTURAL ENGINEERS, PC

Stewart·Cooper·Newell Architects
719 East Second Avenue
Gastonia, NC 28054
Phone: 704.865.6311
Fax: 704.865.0046
www.scn-architects.com
1.800.671.0621

NORTH CAROLINA PROFESSIONAL SEAL 040415 ENGINEER DANIEL P. DONECKER
11/12/20

BAY EXPANSION FOR
GREENVILLE FIRE RESCUE #1
GREENVILLE, NC

LOW STEEL FRAMING PLAN

Sheet No.
S1.20

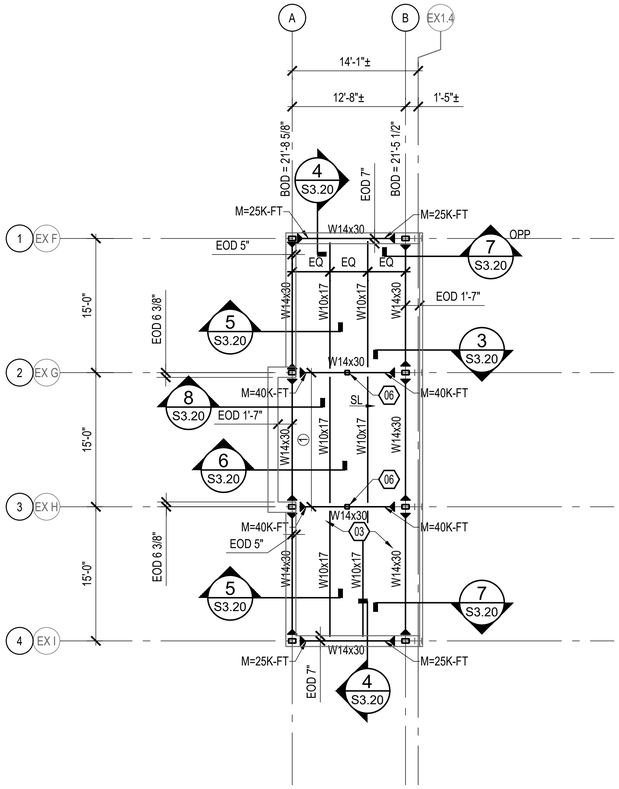


1 S1.30 HIGH STEEL ROOF FRAMING PLAN

1/8" = 1'-0"

lynchmykins
CALCULATE. COLLABORATE. CREATE.
Structural Engineers
301 N West St., Ste 105
Raleigh, NC 27603
919.782.1833 - lynchmykins.com

## ROOF FRAMING PLAN NOTES:

1. REFER TO FOUNDATION PLAN AND ARCHITECTURAL DRAWINGS FOR DIMENSIONS NOT SHOWN.
2. BOTTOM OF DECK ELEVATIONS ARE SHOWN ON PLAN. INTERMEDIATE ELEVATIONS SHALL BE STRAIGHT LINES BETWEEN GIVEN ELEVATIONS. INTERPOLATE AS REQUIRED FOR INTERMEDIATE BEARING ELEVATIONS, UNLESS OTHERWISE NOTED.
3. ROOF FRAMING SHALL BE EQUALLY SPACED NOT TO EXCEED 5'-0" OC TO SUPPORT STEEL ROOF DECK.
4. COORDINATE AND VERIFY ALL MEMBER LOCATIONS, DIMENSIONS, WEIGHTS, OPENING SIZES, AND CURB DIMENSIONS FOR ALL MECHANICAL EQUIPMENT WITH THE ACTUAL EQUIPMENT FURNISHED. INCLUDE THIS INFORMATION ON THE JOIST AND STRUCTURAL STEEL SHOP DRAWINGS.
5. MOMENT CONNECTIONS TO BE DESIGNED FOR 15 K-FT OF FACTORED MOMENT, UNLESS OTHERWISE NOTED, IN ADDITION TO THE SHEAR LOAD GIVEN IN THE GENERAL NOTES.

## KEYNOTES:

03 1 1/2" METAL DECK - REFERENCE GENERAL NOTES.

06 HSS6x6x1/4 POST. COORDINATE LOCATION WITH PARAPET LOCATION PER ARCH.

GENERAL NOTES

[redacted]

Project No.
1667

Date:
11/12/2020
Drawn by:
SSO
Checked by:
DPD
Revisions

© STEWART-COOPER-NEWELL ARCHITECTS, P.A.

[redacted]

NORTH CAROLINA PROFESSIONAL ENGINEERING FIRM C-4360 LYNCHMYKINS STRUCTURAL ENGINEERS, PC

Stewart · Cooper · Newell Architects
719 East Second Avenue
Gastonia, NC 28054
Phone: 704.865.6311
Fax: 704.865.0046
www.scn-architects.com
1.800.671.0621

NORTH CAROLINA PROFESSIONAL SEAL 040415 ENGINEER DANIEL P. DONECKER
11/12/20

BAY EXPANSION FOR
GREENVILLE FIRE RESCUE #1
GREENVILLE, NC

HIGH STEEL ROOF FRAMING PLAN

Sheet No.
S1.30

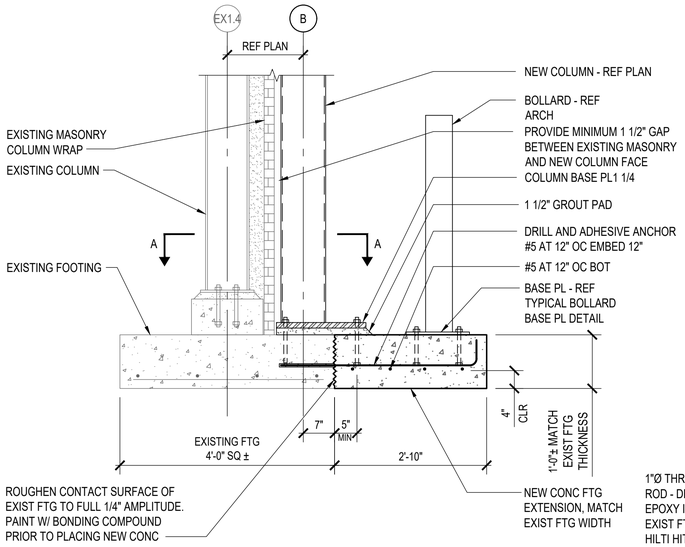


1 S3.10 SECTION
3/4" = 1'-0"

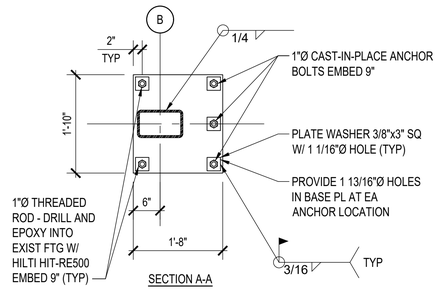


SECTION A-A

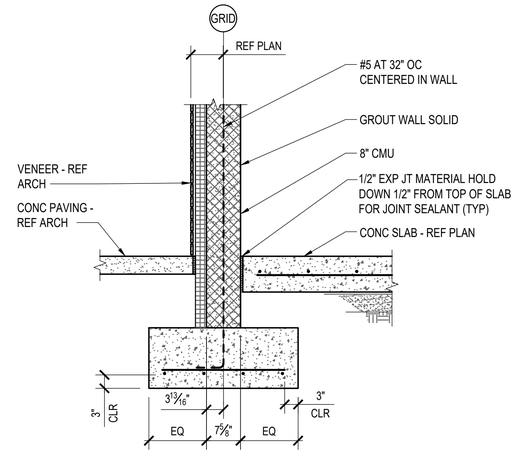


2 S3.10 SECTION
3/4" = 1'-0"

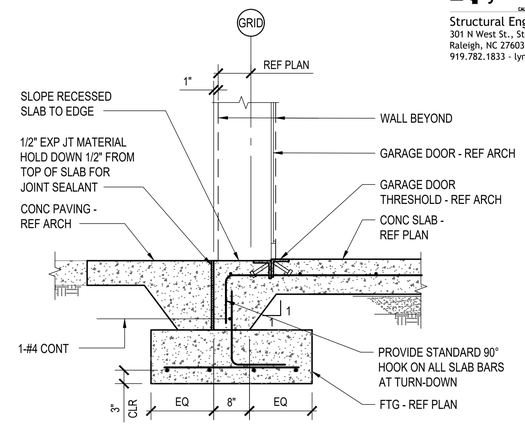


3 S3.10 SECTION
3/4" = 1'-0"

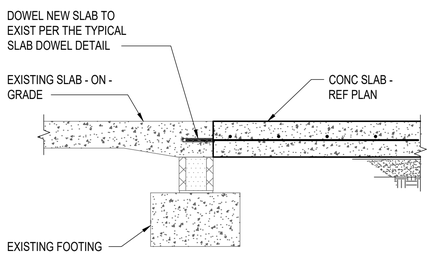


4 S3.10 SECTION
3/4" = 1'-0"

GENERAL NOTES

[redacted]

lynchmykins
CALCULATE. COLLABORATE. CREATE.
Structural Engineers
301 N West St., Ste 105
Raleigh, NC 27603
919.782.1833 - lynchmykins.com

Project No.
1667

Date:
11/12/2020
Drawn by:
SSO
Checked by:
DPD
Revisions

© STEWART · COOPER · NEWELL ARCHITECTS, P.A.

[redacted]

NORTH CAROLINA PROFESSIONAL ENGINEERING FIRM C-4360 LYNCH MYKINS STRUCTURAL ENGINEERS, PC

Stewart · Cooper · Newell Architects
719 East Second Avenue
Gastonia, NC 28054
Phone: 704.865.6311
Fax: 704.865.0046
www.scn-architects.com
1.800.671.0621

NORTH CAROLINA PROFESSIONAL SEAL 040415 ENGINEER DANIEL P. DONECKER
11/12/20

BAY EXPANSION FOR
GREENVILLE FIRE RESCUE #1
GREENVILLE, NC

SECTIONS

Sheet No.
S3.10

lynchmykins
CALCULATE. COLLABORATE. CREATE.
Structural Engineers
301 N West St., Ste 105
Raleigh, NC 27603
919.782.1833 - lynchmykins.com

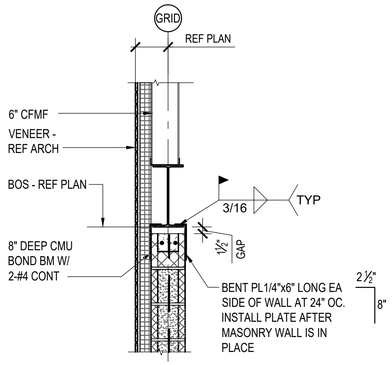


1 SECTION
S3.20 3/4" = 1'-0"

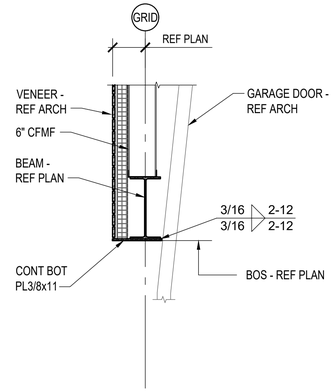


2 SECTION
S3.20 3/4" = 1'-0"

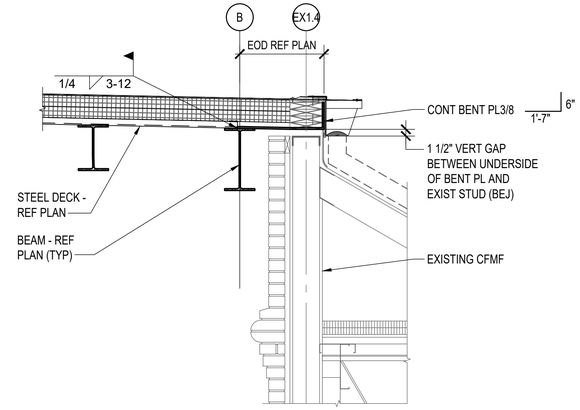


3 SECTION
S3.20 3/4" = 1'-0"

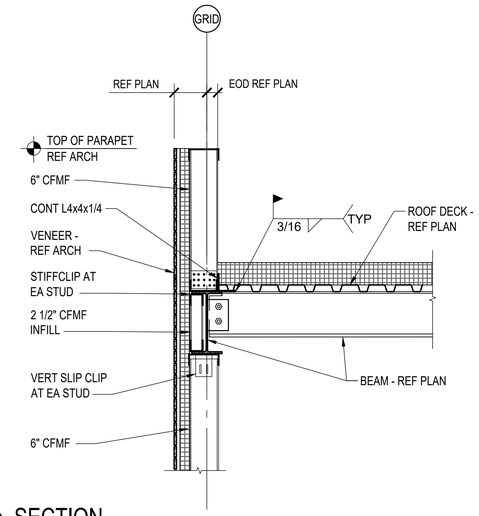


4 SECTION
S3.20 3/4" = 1'-0"

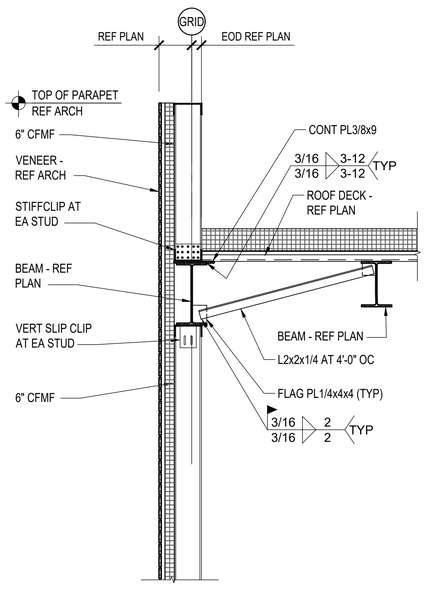


5 SECTION
S3.20 3/4" = 1'-0"

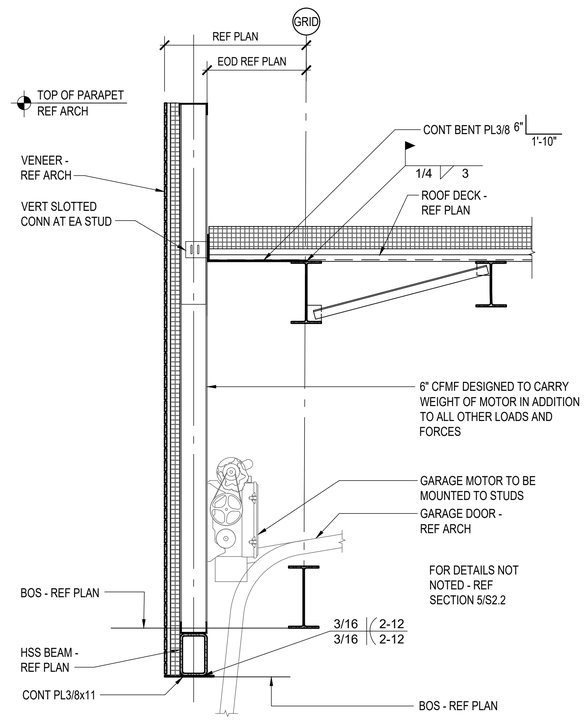


6 SECTION
S3.20 3/4" = 1'-0"

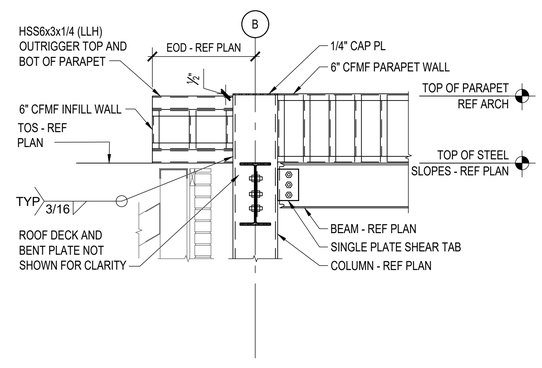


7 SECTION
S3.20 3/4" = 1'-0"

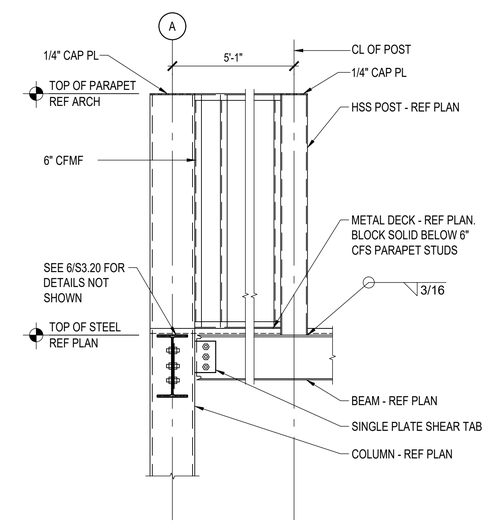


8 SECTION
S3.20 3/4" = 1'-0"

GENERAL NOTES

[redacted]

Project No.
1667

Date:
11/12/2020
Drawn by:
SSO
Checked by:
DPD
Revisions

© STEWART-COOPER-NEWELL ARCHITECTS, P.A.

[redacted]

NORTH CAROLINA PROFESSIONAL ENGINEERING FIRM C-4360 LYNCHMYKINS STRUCTURAL ENGINEERS, PC

Stewart·Cooper·Newell Architects
719 East Second Avenue
Gastonia, NC 28054
Phone: 704.865.6311
Fax: 704.865.0046
www.scn-architects.com
1.800.671.0621

NORTH CAROLINA PROFESSIONAL SEAL 040415 ENGINEER DANIEL P. DONECKER
11/12/20

BAY EXPANSION FOR
GREENVILLE FIRE RESCUE #1
GREENVILLE, NC

SECTIONS

Sheet No.
S3.20

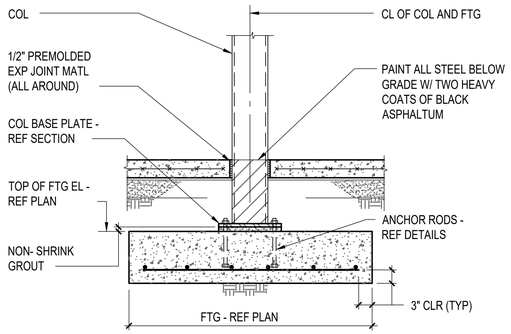


## TYPICAL COLUMN AND FOOTING DETAIL
NTS

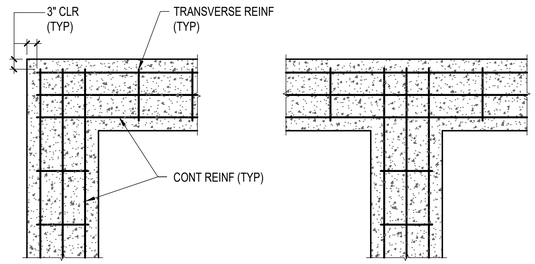


## TYPICAL WALL FOOTING CORNER AND INTERSECTION DETAILS
NTS

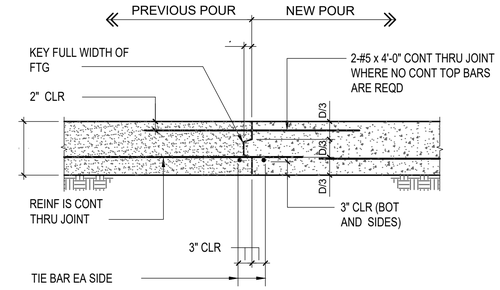


## TYPICAL FOOTING CONSTRUCTION JOINT DETAIL
NTS

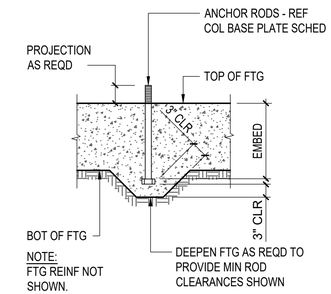


## TYPICAL ANCHOR ROD DETAIL
NTS

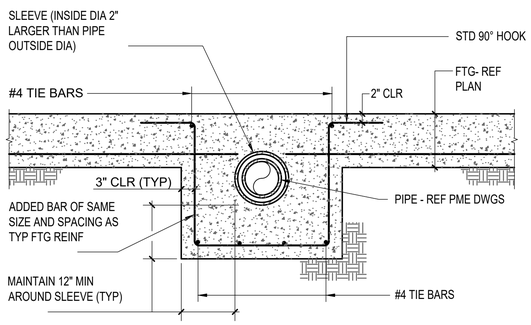


THROUGH FOOTING

NOTE SLEEVES SHALL NOT BE LOCATED IN OR UNDER COL FTGS.

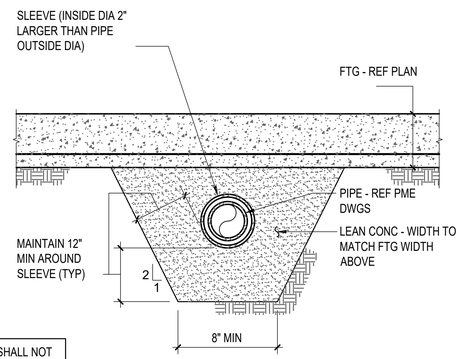


BELOW FOOTING

## TYPICAL PIPE SLEEVE DETAILS
NTS

DRILL HOLES INTO EXIST FTG TO RECEIVE DOWELS. CLEAN HOLES THOROUGHLY OF DEBRIS AND FILL W/ EPOXY. DIA OF HOLES SHALL BE AS RECOMMENDED BY MFR OF EPOXY MATL. IF NOT SPECIFIED BY EPOXY MFR, DIA OF HOLES SHALL BE 1/8" LARGER THAN DOWEL SIZE.

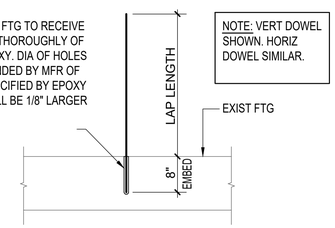


NOTE: VERT DOWEL SHOWN. HORIZ DOWEL SIMILAR.

## TYPICAL EPOXY DOWEL DETAIL
NTS

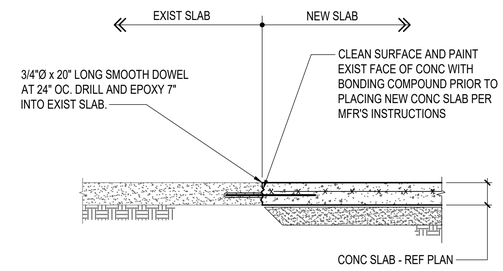


## TYPICAL SLAB DOWEL DETAIL
NTS

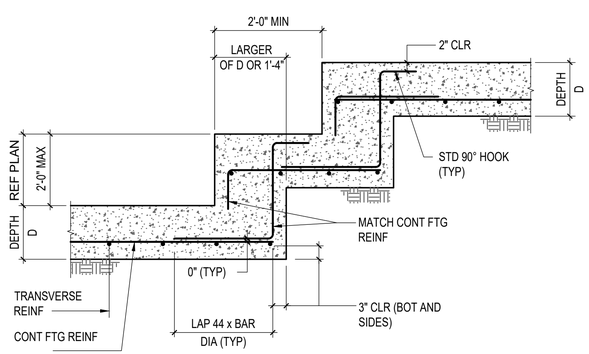


## TYPICAL STEPPED FOOTING DETAIL
NTS (DENOTED SF ON PLAN)

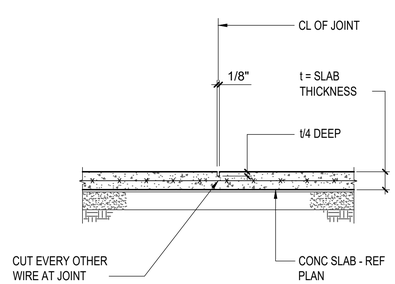


## TYPICAL SAWED JOINT DETAIL
NTS (DENOTED SJ ON PLAN)

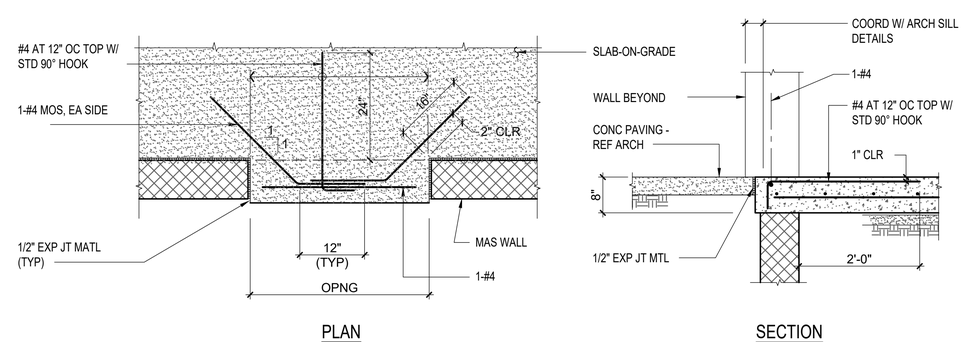


PLAN

SECTION

## TYPICAL EXTERIOR DOORS / OPENINGS DETAIL
NTS

GENERAL NOTES

[redacted]


lynchmykins
CALCULATE. COLLABORATE. CREATE.
Structural Engineers
301 N West St., Ste 105
Raleigh, NC 27603
919.782.1833 - lynchmykins.com


Project No. 1667

Date: 11/12/2020
Drawn by: SSO
Checked by: DPD
Revisions

© STEWART·COOPER·NEWELL ARCHITECTS, P.A.

[redacted]

NORTH CAROLINA PROFESSIONAL ENGINEERING FIRM C-4360 LYNCH MYKINS STRUCTURAL ENGINEERS, PC


Stewart·Cooper·Newell Architects
719 East Second Avenue
Gastonia, NC 28054
Phone: 704.865.6311
Fax: 704.865.0046
www.scn-architects.com
1.800.671.0621


NORTH CAROLINA PROFESSIONAL SEAL 040415 ENGINEER DANIEL P. DONECKER
11/12/20

BAY EXPANSION FOR GREENVILLE FIRE RESCUE #1
GREENVILLE, NC

TYPICAL DETAILS

Sheet No. S5.10

lynchmykins
CALCULATE. COLLABORATE. CREATE.
Structural Engineers
301 N West St., Ste 105
Raleigh, NC 27603
919.782.1833 - lynchmykins.com

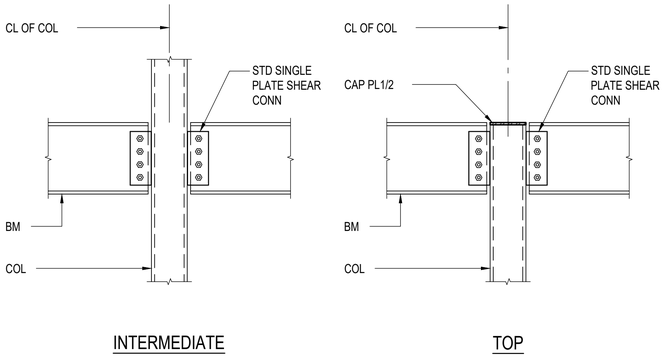


## TYPICAL BEAM TO HSS COLUMN CONNECTION DETAILS
NTS

NOTE:
ALL ERECTION TABS SHALL BE REMOVED. ANY DEFECTS AS A RESULT OF REMOVAL SHALL BE REPAIRED. ALL BOLT HOLES SHALL BE PLUG WELDED AND GROUND SMOOTH.

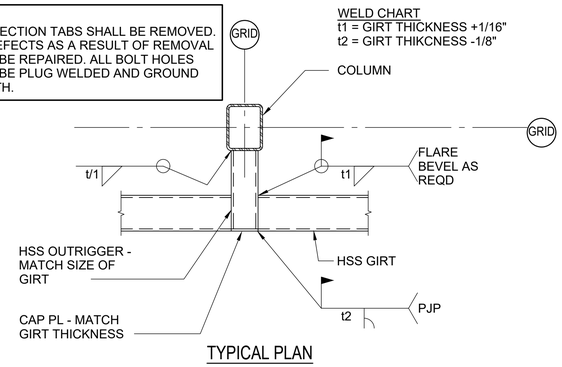


## TYPICAL ECCENTRIC HSS BEAM TO COLUMN CONNE CTION DETAILS
NTS

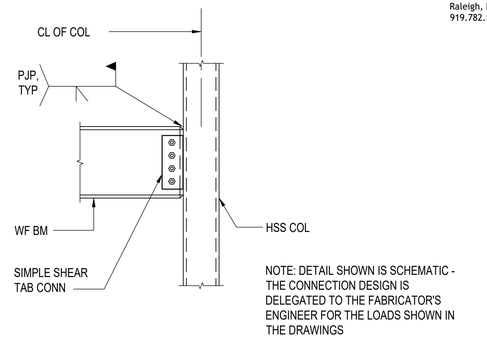


## TYPICAL WIDE FLANGE BEAM TO HSS COLUMN MOMENT CONNECTION DETAIL
NTS

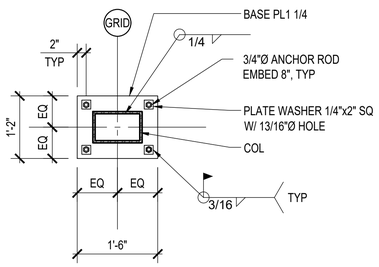


## TYPICAL COLUMN BASE PLATE DETAIL
NTS

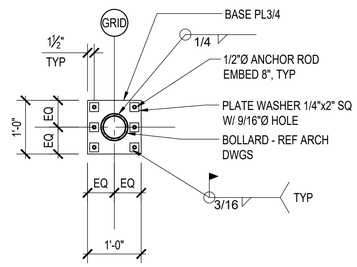


## TYPICAL BOLLARD BASE PLATE DETAIL
NTS

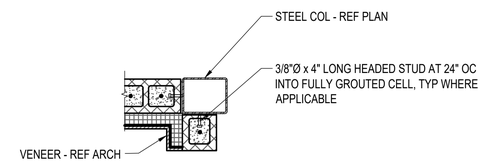


## TYPICAL GARAGE DOOR JAMB DETAIL
NTS

| BOND BEAM LINTEL SCHEDULE | | |
|---|---|---|
| CLEAR SPAN | DEPTH 'D' | REINFORCING |
| | | 8" WIDE |
| 0 TO 5'-4" | 8" | 2-#5 BOTTOM |

NOTES:

1. REFER TO ARCHITECTURAL DRAWINGS FOR SIZE AND LOCATION OF OPENINGS; FOR DUCT OPENINGS REFER TO MECHANICAL DRAWINGS.
2. REFER TO ARCHITECTURAL DRAWINGS FOR WIDTH OF LINTEL.
3. SCHEDULE APPLIES ONLY TO LINTELS NOT OTHERWISE SHOWN ON THE DRAWINGS.

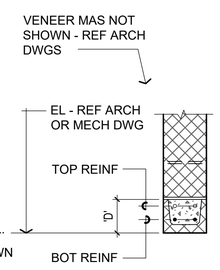


TYPICAL SECTION

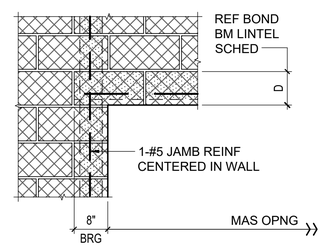


TYPICAL JAMB

## BOND BEAM LINTEL DETAILS
NTS

GENERAL NOTES

[redacted]

Project No.
1667

Date:
11/12/2020
Drawn by:
SSO
Checked by:
DPD
Revisions

© STEWART · COOPER · NEWELL ARCHITECTS, P.A.

[redacted]

NORTH CAROLINA PROFESSIONAL ENGINEERING FIRM C-4360 LYNCHMYKINS STRUCTURAL ENGINEERS, PC

Stewart · Cooper · Newell Architects
719 East Second Avenue
Gastonia, NC 28054
Phone: 704.865.6311
Fax: 704.865.0046
www.scn-architects.com
1.800.671.0621

NORTH CAROLINA PROFESSIONAL SEAL 040415 ENGINEER DANIEL P. DONECKER
11/12/20

BAY EXPANSION FOR
GREENVILLE FIRE RESCUE #1
GREENVILLE, NC

TYPICAL DETAILS

Sheet No.
S5.20

## DEMOLITION NOTES

1. BY NATURE OF THE SCOPE OF THIS DEMOLITION WORK, THESE NOTES ARE NOT MEANT TO BE EXHAUSTIVE, BUT BROAD SCOPING, AND INCLUDES ALL WORK NECESSARY TO COMPLETE THE WORK, AS NOTED HEREIN & DETAILED ELSEWHERE OR REASONABLY INFERABLE FROM OTHER REQUIREMENTS OF THE WORK. IT IS THE CONTRACTOR'S RESPONSIBILITY TO REVIEW THE PLUMBING, MECHANICAL & ELECTRICAL DRAWINGS FOR POSSIBLE FURTHER WORK OR CONFLICTS WITH OTHER TRADES. COORDINATE ALL DEMOLITION AS REQUIRED WITH THESE TRADES.
2. ALL CONTRACTORS MUST MAKE ON SITE VISITATIONS TO PROJECT SITE PRIOR TO BIDDING TO ASCERTAIN THE EXTENT OF DEMOLITION.
3. DISCREPANCIES: THE CONTRACTOR SHALL INFORM THE ARCHITECT IN WRITING OF ANY DISCREPANCIES OR OMISSIONS NOTED ON THE DRAWINGS OR IN THE SPECIFICATIONS OR OF ANY VARIATIONS NEEDED IN ORDER TO CONFORM TO CODES, RULES AND REGULATIONS. UPON RECEIPT OF SUCH INFORMATION, THE ARCHITECT WILL SEND WRITTEN INSTRUCTION TO ALL CONCERNED. ANY SUCH DISCREPANCY, OMISSION, OR VARIATION NOT REPORTED SHALL BE THE RESPONSIBILITY OF THE CONTRACTOR, AND WORK SHALL BE PERFORMED IN A MANNER DIRECTED BY THE ARCHITECT.
4. EXISTING CONDITIONS: ALL EXISTING INFORMATION WAS TAKEN FROM DRAWINGS FURNISHED BY OTHERS WHICH MAY OR MAY NOT BE CORRECT. THE CONTRACTOR SHALL VERIFY ALL DIMENSIONS, ELEVATIONS AND CONDITIONS AT THE JOB SITE. ANY DISCREPANCIES OR VARIATIONS FROM THE CONDITIONS SHOWN ON THE DRAWINGS SHALL BE BROUGHT TO THE ATTENTION OF THE ARCHITECT IN WRITING.
5. THE GENERAL CONTRACTOR SHALL BE RESPONSIBLE FOR THE PROTECTION OF PERSONS USING THE SURROUNDING FACILITIES WHO COME IN CONTACT WITH THE AREA OF CONSTRUCTION. HE SHALL PROPERLY BARRICADE THE AREA TO PREVENT INTRUSION BY PERSONS NOT ASSOCIATED WITH CONSTRUCTION.
6. DRAWING SCALES: THESE DRAWINGS ARE PREPARED TO THE SCALES NOTED, HOWEVER, DIMENSIONS ARE NOT TO BE DERIVED BY SCALING THE PLANS, SECTIONS OR DETAILS. IF THERE IS ANY QUESTION ABOUT DETAILS OR DIMENSIONS, CONTACT THE ARCHITECT FOR INFORMATION PRIOR TO STARTING WORK.
7. THE DEMOLITION CONTRACTOR SHALL BE RESPONSIBLE FOR PROTECTING ALL EXISTING CONSTRUCTION AROUND THE SITE WHICH WILL REMAIN, ANY DAMAGES SHALL BE REPAIRED TO THE OWNER'S SATISFACTION AT NO COST.
8. COORDINATE REMOVAL OF ALL PLUMBING, MECHANICAL & ELECTRICAL ELEMENTS WITH PROPER TRADES PRIOR TO REMOVAL OF WALLS, FLOOR, CEILING, ETC.
9. EACH SUBCONTRACTOR SHALL BE RESPONSIBLE FOR THE COMPLETE DEMOLITION OF ALL ITEMS RELATED TO THEIR PORTION OF WORK. FOR EXAMPLE, ANY ABANDONED DUCTWORK OR HEATING/AC EQUIPMENT & ASSOCIATED CONTROL WIRING SHALL BE DEMOLISHED BY THE MECHANICAL CONTRACTOR. ELECTRICAL WIRING TO THE SAME UNIT WOULD BE BY THE ELECTRICAL CONTRACTOR & GAS PIPING BY THE PLUMBING CONTRACTOR. THIS IS TYPICAL FOR ALL EQUIPMENT AND SERVICES.
10. CONTRACTOR SHALL REMOVE ALL HANGERS, CONCEALED CONDUITS, BOXES, PIPE, DUCTWORK, ETC. SEAL AND/OR PATCH ALL OPENINGS & PREPARE WALLS AS REQUIRED FOR PAINT FINISH.
11. ALL ITEMS REPRESENTED WITH DASHED LINES ON THIS EXISTING PLAN ARE FOR DEMOLITION. ALL EXISTING STRUCTURE TO REMAIN UNLESS NOTED OTHERWISE.
12. ALL ITEMS REPRESENTED WITH SOLID LINES ARE TO REMAIN. ALL ITEMS NECESSARY FOR THE COMPLETION OF THE INTENT OF THE RENOVATION SHALL BE REMOVED WHETHER NOTED OR NOT WITH NO ADDITIONAL COST TO THE OWNER. PRIOR TO REMOVAL OF ANY ITEMS NOT NOTED OR DEPICTED IN CONSTRUCTION DOCUMENTS, THE GENERAL CONTRACTOR SHALL CONSULT THE ARCHITECT.
13. ALL SURFACES TO HAVE FINISHES OR FINISH MATERIAL REMOVED AND NEW FINISHES OR FINISH MATERIALS INSTALLED SHALL BE PROPERLY CLEANED OF SOILS, ADHESIVES, OR OTHER MATERIALS WHICH MAY IMPAIR APPLICATION OF NEW FINISHES AND/OR NEW FINISH MATERIAL.
14. ALL CUTTING & PATCHING TO BE DONE WITH A NEAT WORKMANSHIP. PLUG AND PATCH ALL FLOORS WHERE EXISTING WALLS, PLUMBING, ETC. ARE TO BE REMOVED.
15. EXISTING ROOF & COPING IS TO BE PROTECTED & MAINTAINED INTACT EXCEPT WHERE NEW WORK IS SCHEDULED. ALL WORK RELATED TO ROOF & COPING SHALL NOT AFFECT THE WATERTIGHT INTEGRITY OF THE PROJECT.
16. THE GENERAL CONTRACTOR SHALL BE RESPONSIBLE FOR DISPOSAL OF ALL DEBRIS FROM DEMOLITION.

## IMPORTANT NOTE

THE CONTRACT DOCUMENTS WERE PREPARED BASED ON EXISTING DRAWINGS PROVIDED TO THE ARCHITECT BY THE OWNER AND BASED ON FIELD OBSERVATIONS. ACTUAL FIELD CONDITIONS MAY VARY AND THE CONTRACTOR IS RESPONSIBLE FOR FIELD VERIFYING ALL CONDITIONS AND COORDINATING ANY VARIANCES WITH THE ARCHITECT PRIOR TO DEMOLITION OR CONSTRUCTION AS THE CASE MAY BE.

## PLAN LEGEND

- EXISTING CONSTRUCTION TO REMAIN IN PLACE
- EXISTING CONSTRUCTION TO BE DEMOLISHED
- [1] EXISTING OVERHEAD DOORS & COMPONENTS TO BE REMOVED
- [2] REMOVE EXISTING CONCRETE PAVING
- [2A] ALTERNATE #1 – REMOVE EXISTING CONCRETE PAVING
- [3] REMOVE EXISTING WATER TABLE FACE BRICK
- [4] CUT EXISTING CORNICE TO BE FLUSH WITH FACE BRICK
- [5] CUT EXISTING COPING AT NEW ADDITION
- [6] EXISTING LIGHTS TO BE RELOCATED

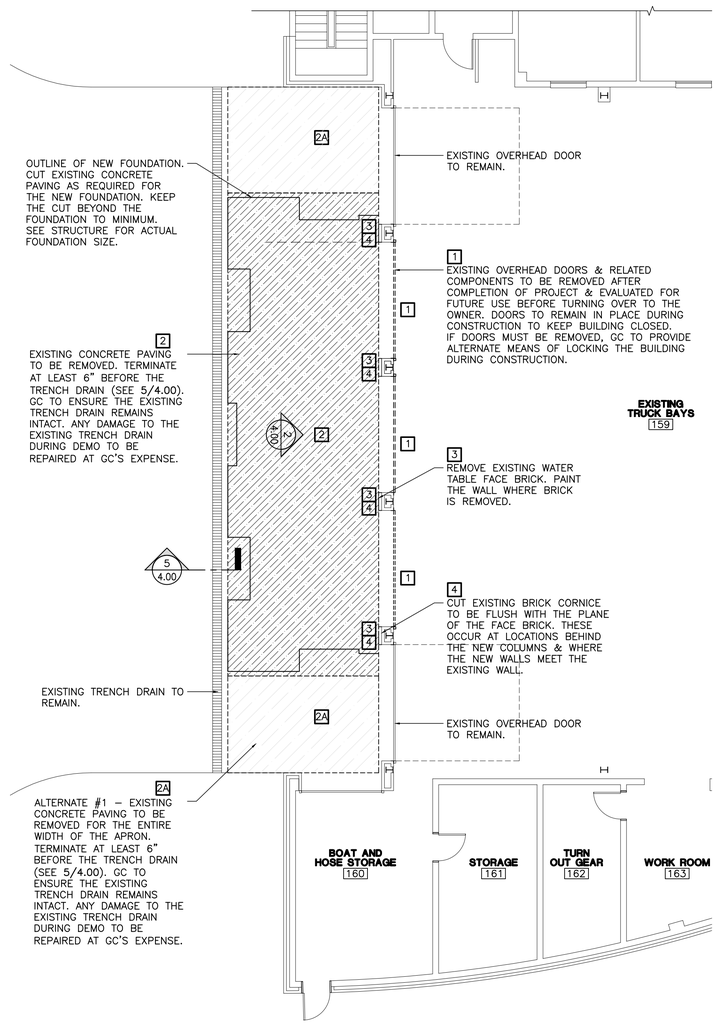


### 1 PARTIAL APPARATUS BAY PLAN - DEMOLITION
SCALE: 1/8" = 1'-0"

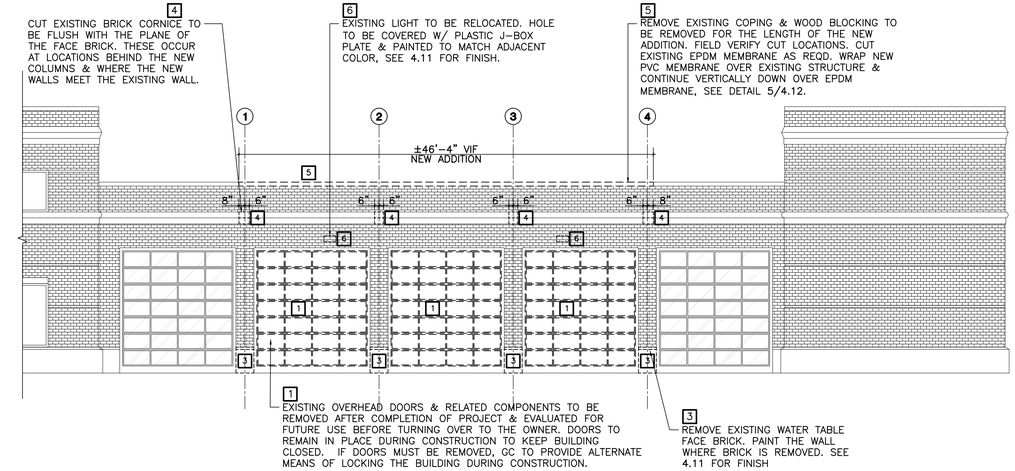


### 2 PARTIAL APPARATUS BAY ELEVATION - DEMOLITION
SCALE: 1/8" = 1'-0"

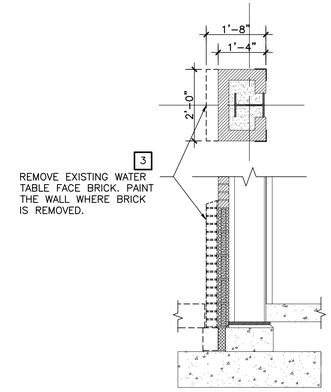


### 3 DEMOLITION #3
SCALE: 1/2" = 1'-0"

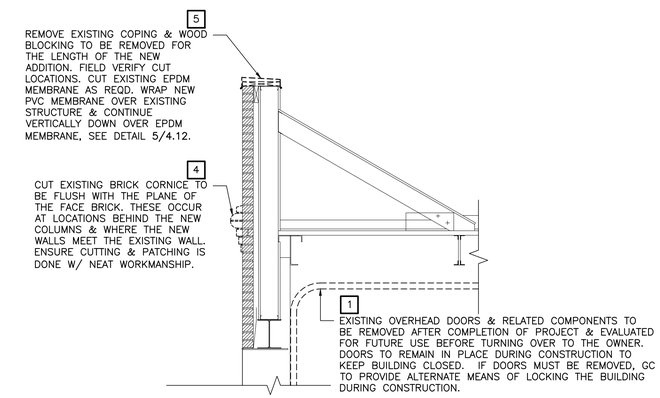


### 4 DEMOLITION #1, #4, #5
SCALE: 1/2" = 1'-0"

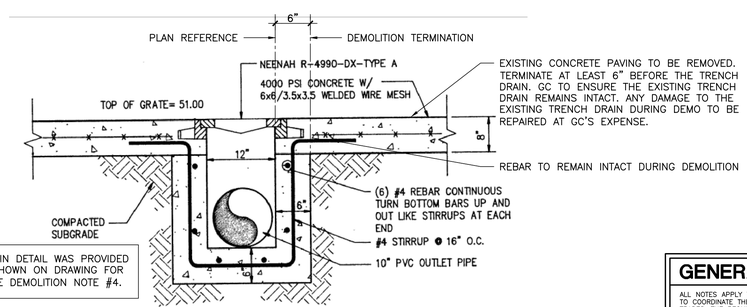


EXISTING TRENCH DRAIN DETAIL WAS PROVIDED BY OTHERS AND IS SHOWN ON DRAWING FOR REFERENCE ONLY. SEE DEMOLITION NOTE #4.

### 5 EXISTING TRENCH DRAIN
SCALE: N.T.S (REF: EXISTING DWG SET)

## GENERAL NOTES

ALL NOTES APPLY TO ALL DRAWINGS AND ALL TRADES. IT IS THE RESPONSIBILITY OF ALL CONTRACTORS AND TRADES TO COORDINATE THE INSTALLATION OF THEIR WORK WITH THE INSTALLATION OF WORK BY ALL OTHER CONTRACTORS AND TRADES, THE REQUIREMENTS OF THE DRAWINGS, GENERAL REQUIREMENTS AND ALL ITEMS OF THE CONTRACT DOCUMENTS ARE EQUALLY BINDING ON ALL CONTRACTORS AND TRADES. EACH CONTRACTOR IS REQUIRED TO MAINTAIN FULL SETS OF THE CONTRACT DOCUMENTS FOR HIS EMPLOYEES USE ON THE PROJECT TO ASSURE THAT ALL WORK IS PROPERLY COORDINATED AND INSTALLED WITH THE WORK OF OTHER CONTRACTORS AND TRADES.

WHENEVER THERE ARE DISCREPANCIES BETWEEN DRAWINGS, OR BETWEEN THE DRAWINGS AND SPECIFICATIONS, OR CONFLICTS WITHIN THE SPECIFICATIONS AND/OR DRAWINGS, AND SUCH DISCREPANCY IS NOT CALLED TO THE ARCHITECT'S ATTENTION IN TIME TO PERMIT CLARIFICATION BY ADDENDUM, THE CONTRACTOR SHALL BASE HIS BID UPON PROVIDING THE BETTER QUALITY OR GREATER OF WORK OR MATERIAL CALLED FOR, SHALL SUBMIT A WRITTEN STATEMENT WITH HIS PROPOSAL NOTING SUCH DISCREPANCIES, AND SHALL SO FURNISH AND INSTALL SUCH BETTER QUALITY OR GREATER QUANTITY UNLESS OTHERWISE ORDERED IN WRITING.

Project No.
1667

Date Printed: 11.12.2020
Drawn by: IS/JJ
Checked by: JRS
Revisions

© STEWART-COOPER-NEWELL ARCHITECTS, P.A.

THIS DRAWING IS THE PROPERTY OF STEWART-COOPER-NEWELL ARCHITECTS, P.A. AND IS SUBJECT TO FEDERAL COPYRIGHT LAWS. THIS DRAWING MAY NOT BE REPRODUCED, PUBLISHED OR USED IN ANY WAY WITHOUT THE WRITTEN PERMISSION OF STEWART-COOPER-NEWELL ARCHITECTS, P.A.

STEWART-COOPER-NEWELL ARCHITECTS, P.A. REGISTERED ARCHITECTURAL CORPORATION LIC. NO. 51313 NORTH CAROLINA GASTONIA, N.C.

Stewart · Cooper · Newell Architects
719 East Second Avenue
Gastonia, NC 28054
Phone: 704.865.6311
Fax: 704.865.0046
1.800.671.0621
www.scn-architects.com

JAMES ROBERT STUMBO REGISTERED ARCHITECT 5728 10/21/2020 NORTH CAROLINA HICKORY, N.C.

BAY EXPANSION FOR
GREENVILLE FIRE RESCUE #1
GREENVILLE, NC

DEMOLITION PLAN, ELEVATION & DETAILS

Sheet No.
4.00

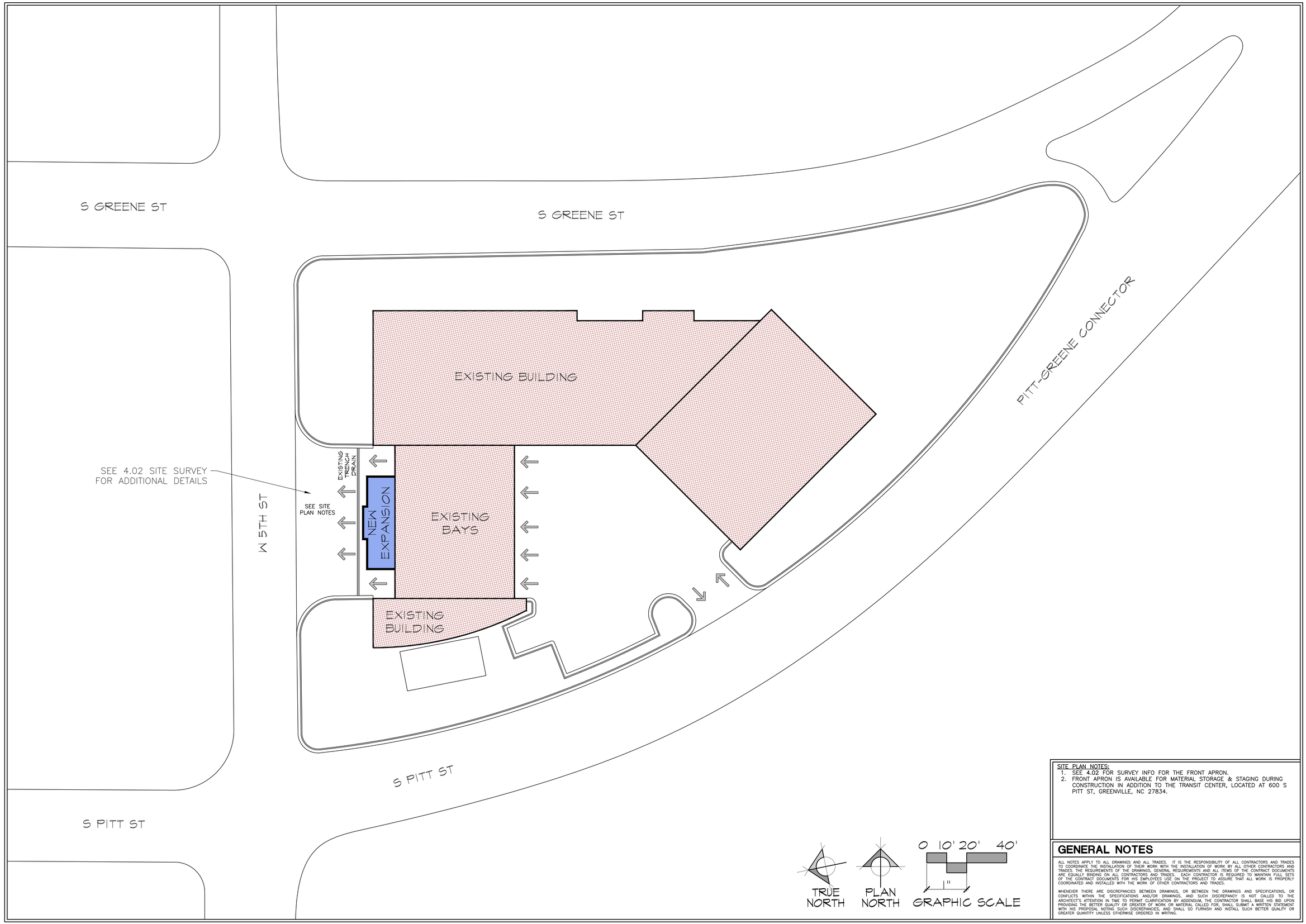


SITE PLAN NOTES:
1. SEE 4.02 FOR SURVEY INFO FOR THE FRONT APRON.
2. FRONT APRON IS AVAILABLE FOR MATERIAL STORAGE & STAGING DURING CONSTRUCTION IN ADDITION TO THE TRANSIT CENTER, LOCATED AT 600 S PITT ST, GREENVILLE, NC 27834.

## GENERAL NOTES

ALL NOTES APPLY TO ALL DRAWINGS AND ALL TRADES. IT IS THE RESPONSIBILITY OF ALL CONTRACTORS AND TRADES TO COORDINATE THE INSTALLATION OF THEIR WORK WITH THE INSTALLATION OF WORK BY ALL OTHER CONTRACTORS AND TRADES. THE REQUIREMENTS OF THE DRAWINGS, GENERAL REQUIREMENTS AND ALL ITEMS OF THE CONTRACT DOCUMENTS ARE EQUALLY BINDING ON ALL CONTRACTORS AND TRADES. EACH CONTRACTOR IS REQUIRED TO MAINTAIN FULL SETS OF THE CONTRACT DOCUMENTS FOR HIS EMPLOYEES USE ON THE PROJECT TO ASSURE THAT ALL WORK IS PROPERLY COORDINATED AND INSTALLED WITH THE WORK OF OTHER CONTRACTORS AND TRADES.

WHENEVER THERE ARE DISCREPANCIES BETWEEN DRAWINGS, OR BETWEEN THE DRAWINGS AND SPECIFICATIONS, OR CONFLICTS WITHIN THE SPECIFICATIONS AND/OR DRAWINGS, AND SUCH DISCREPANCY IS NOT CALLED TO THE ARCHITECT'S ATTENTION IN TIME TO PERMIT CLARIFICATION BY ADDENDUM, THE CONTRACTOR SHALL BASE HIS BID UPON PROVIDING THE BETTER QUALITY OR GREATER OF WORK OR MATERIAL CALLED FOR, SHALL SUBMIT A WRITTEN STATEMENT WITH HIS PROPOSAL NOTING SUCH DISCREPANCIES, AND SHALL SO FURNISH AND INSTALL SUCH BETTER QUALITY OR GREATER QUANTITY UNLESS OTHERWISE ORDERED IN WRITING.

Project No.
1667

Date Printed:
11.12.2020
Drawn by:
IS/JJ
Checked by:
JRS
Revisions

© STEWART-COOPER-NEWELL ARCHITECTS, P.A.

THIS DRAWING IS THE PROPERTY OF STEWART-COOPER-NEWELL ARCHITECTS, P.A. AND IS SUBJECT TO FEDERAL COPYRIGHT LAWS. THIS DRAWING MAY NOT BE REPRODUCED, PUBLISHED OR USED IN ANY WAY WITHOUT THE WRITTEN PERMISSION OF STEWART-COOPER-NEWELL ARCHITECTS, P.A.

STEWART-COOPER-NEWELL ARCHITECTS, P.A.
REGISTERED ARCHITECTURAL CORPORATION
LIC. NO. 51313
NORTH CAROLINA
GASTONIA N.C.

Stewart · Cooper · Newell Architects
719 East Second Avenue
Gastonia, NC 28054
Phone: 704.865.6311
Fax: 704.865.0046
1.800.671.0621
www.scn-architects.com

JAMES ROBERT STUMBO
REGISTERED ARCHITECT
5728
10/21/2020
NORTH CAROLINA
HICKORY N.C.

BAY EXPANSION FOR
GREENVILLE FIRE RESCUE #1
GREENVILLE, NC

SITE PLAN

Sheet No.
4.01

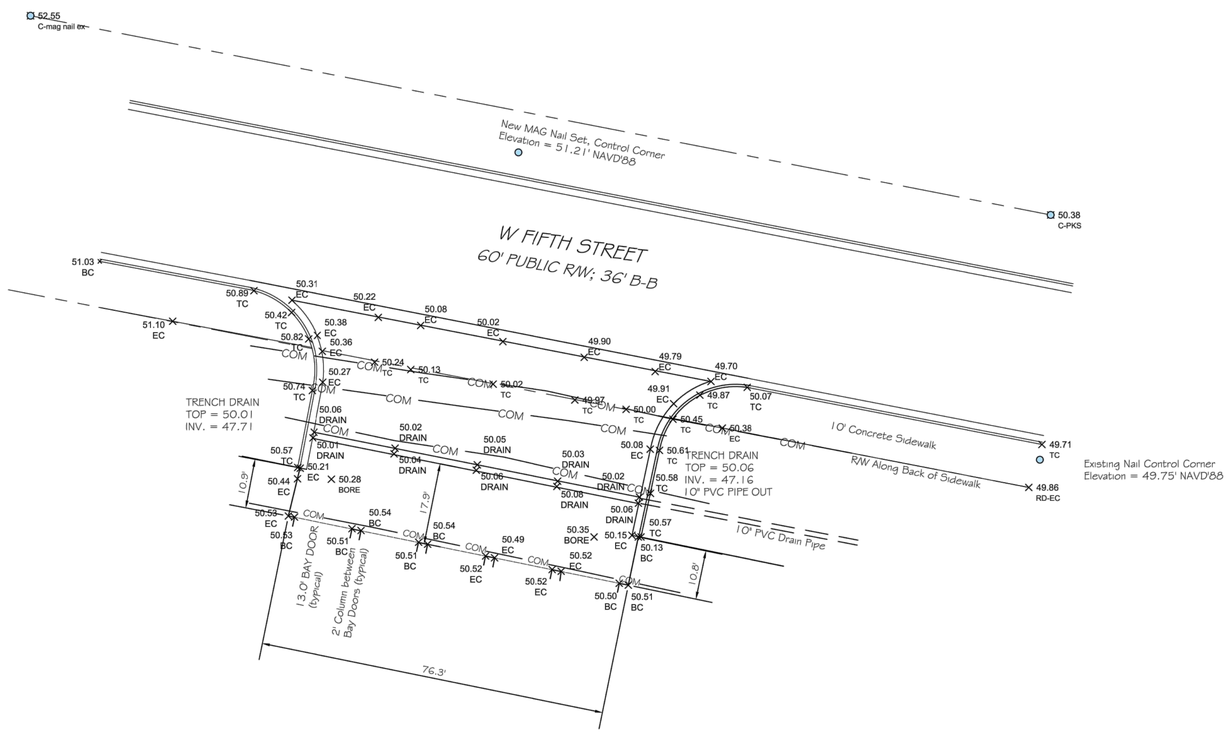


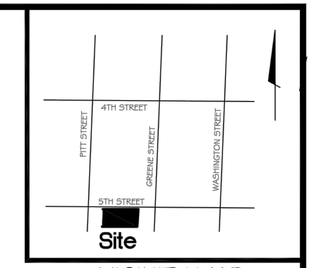


VICINITY MAP

NC GRID NORTH NAD 83 (2011)

## LEGEND

- ● = CONTROL CORNER
- × = TOPO SHOT, CODE, ELEVATION
- TC = TOP OF CURB OR TOP OF CONCRETE
- BC = BUILDING CORNER OF PARAPET WALL
- EC = EDGE OF CONCRETE
- BORE = LOCATION MARKED FOR A SOIL BORE
- DRAIN = TOP OF FRAME OF TRENCH DRAIN
- —COM— = COMMUNICATION LINE AS MARKED

## GRAPHIC SCALE

20' 0 10' 20' 40'

( IN FEET )
1 inch = 20 feet.

City of Greenville
Fire Station #1

PRELIMINARY SURVEY
RELEASED FOR REVIEW

1 **SITE SURVEY**
SCALE: SEE GRAPHIC SCALE

SURVEY DATA WAS PROVIDED BY OTHERS AND IS SHOWN ON DRAWING FOR REFERENCE ONLY

Location Survey
# CITY OF GREENVILLE

BEING THE NORTH APRON OF THE TRUCK BAY OF FIRE STATION #1

GREENVILLE, GREENVILLE TOWNSHIP, PITT COUNTY, NORTH CAROLINA

OWNER: CITY OF GREENVILLE
ADDRESS: PO BOX 7207, GREENVILLE, NC 27835
PHONE: 252-329-4467

City of Greenville
Public Works
1500 BEATTY STREET
GREENVILLE NC, 27834
(252) 329-4467

| | |
|---|---|
| SURVEYED: BLM | APPROVED: KM |
| DRAWN: BLM | DATE: 10-01-20 |
| CHECKED: KM | SCALE: 1" = 20' |

Project No.
1667

Date Printed:
11.12.2020
Drawn by:
IS/JJ
Checked by:
JRS
Revisions

© STEWART-COOPER-NEWELL ARCHITECTS, P.A.

THIS DRAWING IS THE PROPERTY OF STEWART-COOPER-NEWELL ARCHITECTS, P.A. AND IS SUBJECT TO FEDERAL COPYRIGHT LAWS. THIS DRAWING MAY NOT BE REPRODUCED, PUBLISHED OR USED IN ANY WAY WITHOUT THE WRITTEN PERMISSION OF STEWART-COOPER-NEWELL ARCHITECTS, P.A.

STEWART-COOPER-NEWELL ARCHITECTS, P.A. REGISTERED ARCHITECTURAL CORPORATION LIC. NO. 51313 NORTH CAROLINA GASTONIA, N.C.

Stewart · Cooper · Newell Architects
719 East Second Avenue
Gastonia, NC 28054
Phone: 704.865.6311
Fax: 704.865.0046
www.scn-architects.com
1.800.671.0621

JAMES ROBERT STUMBO REGISTERED PROFESSIONAL ENGINEER 5728 10/21/2020 HICKORY, N.C.

BAY EXPANSION FOR
GREENVILLE FIRE RESCUE #1
GREENVILLE, NC

SITE SURVEY

Sheet No.
4.02

1 FLOOR PLAN (DIMENSIONS)
SCALE: 1/8" = 1'-0"

NOTE:

SEE ZIP SYSTEM AND THIN BRICK VENEER INSTALL GENERAL NOTES BELOW.

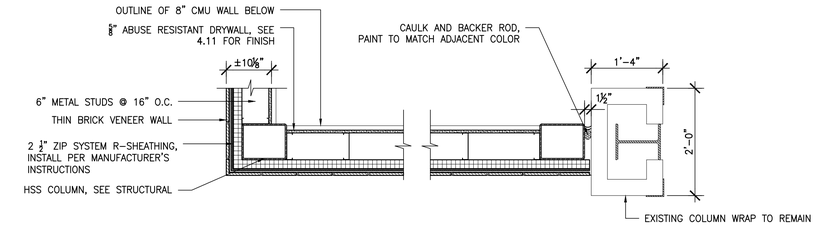


2A PLAN SECTION @ ENDWALL (UPPER)
SCALE: 3/4" = 1'-0"

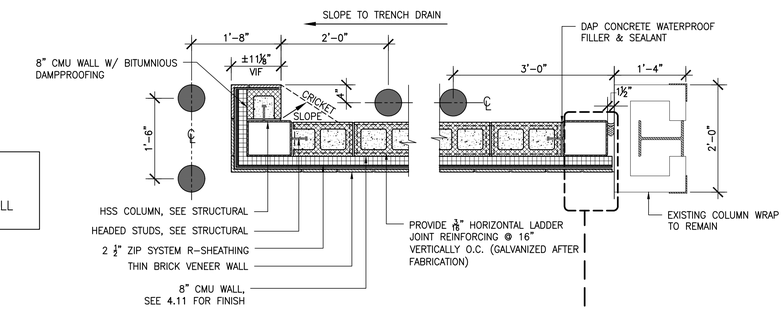


2 PLAN SECTION @ ENDWALL (LOWER)
SCALE: 3/4" = 1'-0"

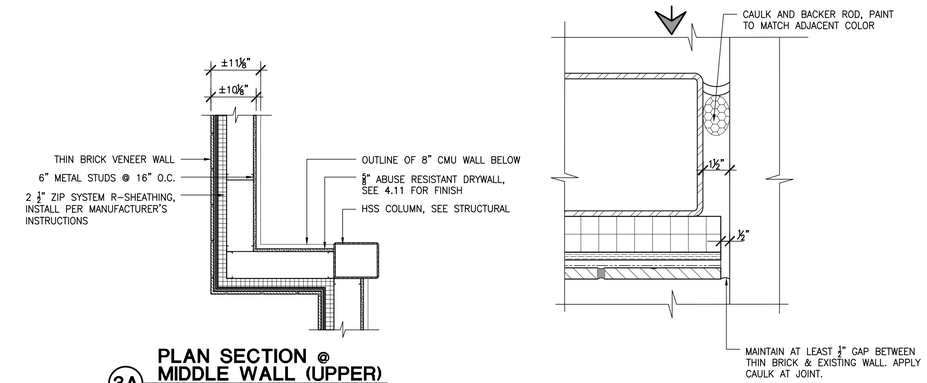


3A PLAN SECTION @ MIDDLE WALL (UPPER)
SCALE: 3/4" = 1'-0"

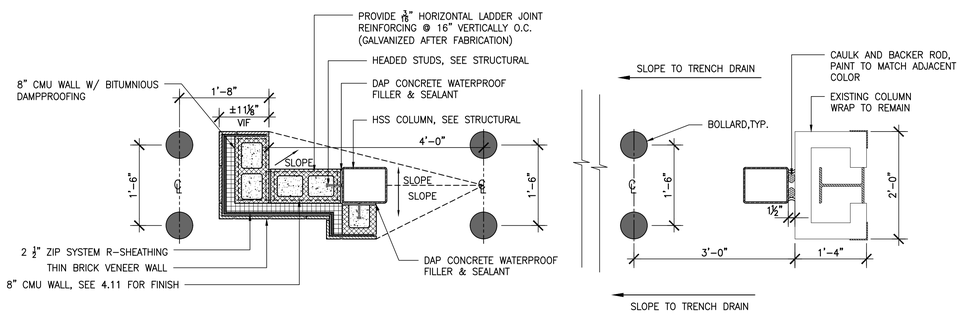


3 PLAN SECTION @ MIDDLE WALL (LOWER)
SCALE: 3/4" = 1'-0"

4 PLAN SECTION @ FREE STANDING COLUMN
SCALE: 3/4" = 1'-0"

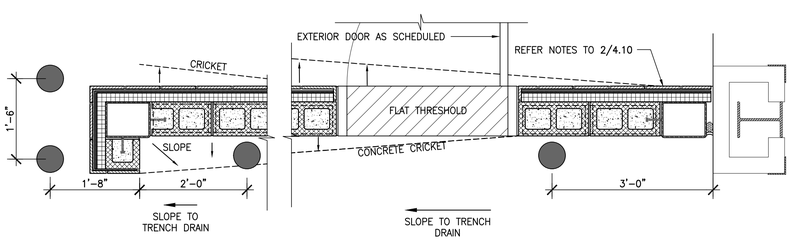


5 PLAN SECTION END WALL (LOWER)
SCALE: 3/4" = 1'-0"

0' 4' 8' 16'
1/8" GRAPHIC SCALE

TRUE NORTH

PLAN NORTH

ZIP SYSTEM INSTALL GENERAL NOTES:

1. INSTALL ZIP WALL SYSTEM PER MANUFACTURER RECOMMENDATIONS.
2. INSTALL LONG SIDE OF THE PANEL ORIENTED HORIZONTALLY TO THE FRAMING MEMBERS.
3. FASTEN ZIP WALL TO CMU WITH PANCAKE TAPCON SCREWS. ON OTHER AREAS, USE RECOMMENDED FASTENERS(FLAT HEADED NAILS).
4. USE RECOMMENDED TAPE AND PROPER TAPPING METHODS ON ALL ZIP PANEL JOINTS/CORNERS IN THE ZIP SYSTEM INSULATED R-SHEATHING.
5. TAPE ALL DOOR OPENINGS ALONG THE PERIMETER.
6. PREPARE ZIP WALL SURFACE TO RECEIVE THIN BRICK VENEER PER MANUFACTURING REQUIREMENTS.

THIN BRICK VENEER INSTALL GENERAL NOTES:

1. REFER TO MANUFACTURER FOR ACCEPTABLE INSTALLATION METHODS FOR THIN BRICK.
2. PROVIDE WATER-RESISTIVE BARRIER AND MEANS OF DRAINAGE AS REQUIRED.
3. PROVIDE FLASHING/WEEP SCREED AT LOCATIONS AS RECOMMENDED AND REQUIRED.
4. FOLLOW MANUFACTURER'S INSTRUCTION FOR MOVEMENT JOINT SPACING AND CONSTRUCTION.
5. PROVIDE PRE-FABRICATED CORNER PIECES @ ALL EXPOSED CORNERS.
6. CAULK COLOR TO MATCH NEW BRICK. PROVIDE SAMPLES FOR SELECTION.

NOTES:

1. CMU & STUD WALL TO BE ALIGNED AS SHOWN IN PLAN DETAILS TO ALLOW FOR A CONTINUOUS PLANE FOR ZIP SYSTEM INSTALLATION.
2. VERIFY ALL STRUCTURAL MEMBERS IN THE STRUCTURAL PLAN.
3. SEE SHEET 5.21 FOR THE ENLARGED TYPICAL WALL SECTION DETAIL ATTACHMENT OF THIN BRICK VENEER TO THE ZIP SYSTEM.
4. PROVIDE LAYOUT OF CONCRETE CONTROL JOINTS PRIOR TO INSTALLATION FOR APPROVAL.
5. CONCRETE CRICKETS: SLOPE AND FEATHER CONCRETE TO ALLOW DRAINAGE.

## GENERAL NOTES

ALL NOTES APPLY TO ALL DRAWINGS AND ALL TRADES. IT IS THE RESPONSIBILITY OF ALL CONTRACTORS AND TRADES TO COORDINATE THE INSTALLATION OF THEIR WORK WITH THE INSTALLATION OF WORK BY ALL OTHER CONTRACTORS AND TRADES. THE REQUIREMENTS OF THE DRAWINGS, GENERAL REQUIREMENTS AND ALL ITEMS OF THE CONTRACT DOCUMENTS ARE EQUALLY BINDING ON ALL CONTRACTORS AND TRADES. EACH CONTRACTOR IS REQUIRED TO MAINTAIN FULL SETS OF THE CONTRACT DOCUMENTS FOR HIS EMPLOYEES USE ON THE PROJECT TO ASSURE THAT ALL WORK IS PROPERLY COORDINATED AND INSTALLED WITH THE WORK OF OTHER CONTRACTORS AND TRADES.

WHENEVER THERE ARE DISCREPANCIES BETWEEN DRAWINGS, OR BETWEEN THE DRAWINGS AND SPECIFICATIONS, OR CONFLICTS WITHIN THE SPECIFICATIONS AND/OR DRAWINGS, AND SUCH DISCREPANCY IS NOT CALLED TO THE ARCHITECT'S ATTENTION IN TIME TO PERMIT CLARIFICATION BY ADDENDUM, THE CONTRACTOR SHALL BASE HIS BID UPON PROVIDING THE BETTER QUALITY OR GREATER OF WORK OR MATERIAL CALLED FOR, SHALL SUBMIT A WRITTEN STATEMENT WITH HIS PROPOSAL NOTING SUCH DISCREPANCIES, AND SHALL SO FURNISH AND INSTALL SUCH BETTER QUALITY OR GREATER QUANTITY UNLESS OTHERWISE ORDERED IN WRITING.

Project No.
1667

Date Printed:
11.12.2020
Drawn by:
IS/JJ
Checked by:
JRS
Revisions

© STEWART-COOPER-NEWELL ARCHITECTS, P.A.

THIS DRAWING IS THE PROPERTY OF STEWART-COOPER-NEWELL ARCHITECTS, P.A. AND IS SUBJECT TO FEDERAL COPYRIGHT LAWS. THIS DRAWING MAY NOT BE REPRODUCED, PUBLISHED OR USED IN ANY WAY WITHOUT THE WRITTEN PERMISSION OF STEWART-COOPER-NEWELL ARCHITECTS, P.A.

STEWART-COOPER-NEWELL ARCHITECTS, P.A. REGISTERED ARCHITECTURAL CORPORATION LIC. NO. 51313 NORTH CAROLINA GASTONIA, N.C.

Stewart · Cooper · Newell Architects
719 East Second Avenue
Gastonia, NC 28054
Phone: 704.865.6311
Fax: 704.865.0046
1.800.671.0621
www.scn-architects.com

JAMES ROBERT STUMBO REGISTERED ARCHITECT 15728 10/21/2020 NORTH CAROLINA HICKORY, N.C.

BAY EXPANSION FOR
GREENVILLE FIRE RESCUE #1
GREENVILLE, NC

FLOOR PLAN
with DIMENSIONS

Sheet No.
4.10

# FINISH SCHEDULE & NOTES

**GENERAL NOTE:** ALL SURFACES SHALL RECEIVE A FINISH WHETHER NOTED OR NOT. ITEMS NOT NOTED WILL BE SELECTED BY THE ARCHITECT DURING CONSTRUCTION.

## PAINTS (NOTED AS PNT-)

**GENERAL NOTE:** ALL PAINTS SHALL BE SCUFF RESISTANT PAINT. PREPARE SUBSTRATE PER MANUFACTURER'S RECOMMENDATIONS.

**PNT-1** SW 7014 EIDER WHITE, SEMI-GLOSS FINISH (FIELD WALL – SEE 4/4.11)

**PNT-2** SW 6039 POISED TAUPE, SEMI-GLOSS FINISH (FIELD WALL – SEE 4/4.11)

**PNT-3** SW 9183 DARK CLOVE, SEMI-GLOSS FINISH (ACCENT WALL – SEE 4/4.11)

**PNT-4** SW 9183 DARK CLOVE, SEMI-GLOSS FINISH (HOLLOW METAL DOORS & FRAMES)

1. ALL INTERIOR CMU TO RECEIVE 2 COATS OF BLOCK FILLER & 2 COATS OF ACRYLIC PAINT.
2. PAINT ALL EXPOSED STRUCTURE, VENTS, GRILLES, PIPING, ETC. TO MATCH ADJACENT PAINT COLOR, UNLESS NOTED OTHERWISE.
3. ALL EXPOSED STEEL TO RECEIVE EXTERIOR HIGH-PERFORMANCE COATING.
4. COORDINATE PAINT FOR MEP, FP PIPING & CONDUITS PER CODE.

BASE-BID: PAINT NEW CONSTRUCTION.
ALTERNATE #2: PAINT NEW CONSTRUCTION & EXISTING APPARATUS BAYS.

## FLOOR

**SC-1** SEALED CONCRETE WITH 2 COATS OF CONCRETE SEALER, FINISH TO MATCH EXISTING BAY FLOOR

1. PROTECT EXPOSED CONCRETE SLAB FROM MUD AND OIL STAINS. ALL STAINS MUST BE COMPLETELY REMOVED FROM CONCRETE.
2. ALL EXPOSED CONCRETE SLABS MUST RECEIVE A SECOND FINAL CLEAR COAT OF SEALER PRIOR TO TURNING PROJECT OVER TO OWNER UNLESS INSTRUCTED OTHERWISE.
3. OWNER MUST RECOMMEND FINISH FOR BAY AREA CONCRETE SLAB PRIOR TO GENERAL CONTRACTOR'S POURING UNLESS INSTRUCTED OTHERWISE.

## CEILING

**CLG-1** EXPOSED CEILING STRUCTURE, PAINT TO MATCH EXISTING CEILING

1. ALL STRUCTURE AND DECKING TO BE PAINTED. ANY STRUCTURE THAT HAS NOT BEEN PRE-FINISHED SHALL BE PRIMED WITH SHERWIN WILLIAMS ALL PURPOSE METAL PRIMER (GRAY) PRIOR TO TOPCOAT APPLICATION OF DRY FOG SEMI-GLOSS PAINT (WHITE).

# DOORS

## HOLLOW METAL DOOR & FRAME

1. HOLLOW METAL DOOR TO BE HEAVY DUTY, (PAINT) 1-¾" HOLLOW METAL WITH CLOSED TOP & BOTTOM (14 GAUGE).
2. HALLOW METAL DOOR FRAME TO BE COLD ROLLED GALVANIZED STEEL (14 GAUGE).
3. HOLLOW METAL DOOR AND FRAME TO BE PAINTED (TBD:xxx)
4. METAL FRAME, DOOR AND HARDWARE TO BE INSTALLED IN STRICT ACCORDANCE WITH MANUFACTURERS WRITTEN INSTRUCTIONS.
5. ALL HARDWARE IS TO BE WEATHER RESISTANT.
6. PAINT TOP AND BOTTOM OF ALL HOLLOW METAL DOOR.
7. KEYING IS TO BE DETERMINED BY THE OWNER AND COORDINATED BY G.C.
8. ENSURE DOOR IS FACTORY REINFORCED AND PREPPED TO RECIEVE CLOSURE AND CONTINUOUS HINGE.
9. SUPPLIER TO FURNISH CUT SHEET ON ALL ITEMS THAT HAS BEEN SPECIFIED ON THESE ARCHITECTURAL DOCS. HERE-IN.

## OVERHEAD DOORS

OVERHEAD DOOR COMPANY OR APPROVED EQUAL.
(ALUMINUM INSULATED GLASS IN STANDARD COLOR, TBD)

1. GC TO VERIFY DOOR OPENING BEFORE FABRICATION.
2. NO EXPOSED ELECTRICAL CONDUIT.
3. GC TO COORDINATE MOUNTING HEIGHTS OF PHOTO EYE SENSORS WITH THE FIRE DEPARTMENT.
4. SEE ULTIMATE DESIGN WIND SPEED IN S.01.

## GLAZING

**G-1** MANUFACTURER'S UV TINTED ¼" THICK DOUBLE PANE INSULATED DSB GLASS.
COLOR: TO MATCH EXISTING OVERHEAD DOOR GLAZING.

**G-2** 1" THICK THERMOPANE (SOLARBAN 60) POLISHED PLATE INSULATING GLASS, BOTH PANES TEMPERED, LOW-E, AS MANUFACTURED BY VITRO ARCHITECTURAL GLASS. COLOR: CLEAR GLASS

## HARDWARE

| | |
|---|---|
| LOCK-LATCH | VON DUPRIN: 98L X 03 LEVEL X US32D |
| KEYPAD | TRILOGY ETDL27 |
| HINGES | (1½" PR.) – 4½" X 4½" – PEMKO_FM_HD FULL MORTISE HINGE |
| SILENCERS | (3) IVES SR64 |
| CLOSER | (1) HEAVY DUTY LCN 4040XP SERIES X US32D (MOUNT ON INTERIOR SIDE OF DOOR), PROVIDE STOP ARM |
| THRESHOLD | ZERO #566A ALUMINUM THRESHOLD (SET IN WATERPROOF MASTIC) |
| WEATHERSTRIPPING | PEMKO 290 PK HEAVY DUTY PERIMETER GASKETING |
| DRIP GUARD | PEMKO 3452_NB BRUSH SEAL/ALUMINUM RETAINER W/ RAIN DRIP (TOP & BOTTOM) |

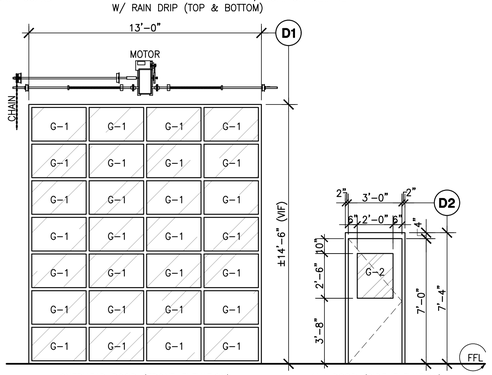


OVERHEAD DOOR (FRONT ELEVATION)
QUANTITY: 3
PROVIDE 2-HANDHELD REMOTE CONTROL PER DOOR. PROVIDE RSX OPERATOR (CENTER MOUNT) W/ HOIST. COORDINATE MOUNTING SIDE OF CHAIN W/ OWNER. TRACK TO BE 3" & OPERATOR SHAFT TO BE SOLID.

MAN DOOR (SIDE ELEVATION)
QUANTITY: 1
1-¾" HOLLOW METAL DOOR (CLOSED TOP & BOTTOM) W/ HOLLOW METAL FRAME (FULLY WELDED, FIRE RATED AS REQ'D)

## 1 DOOR TYPES
SCALE: 1/4" = 1'-0"

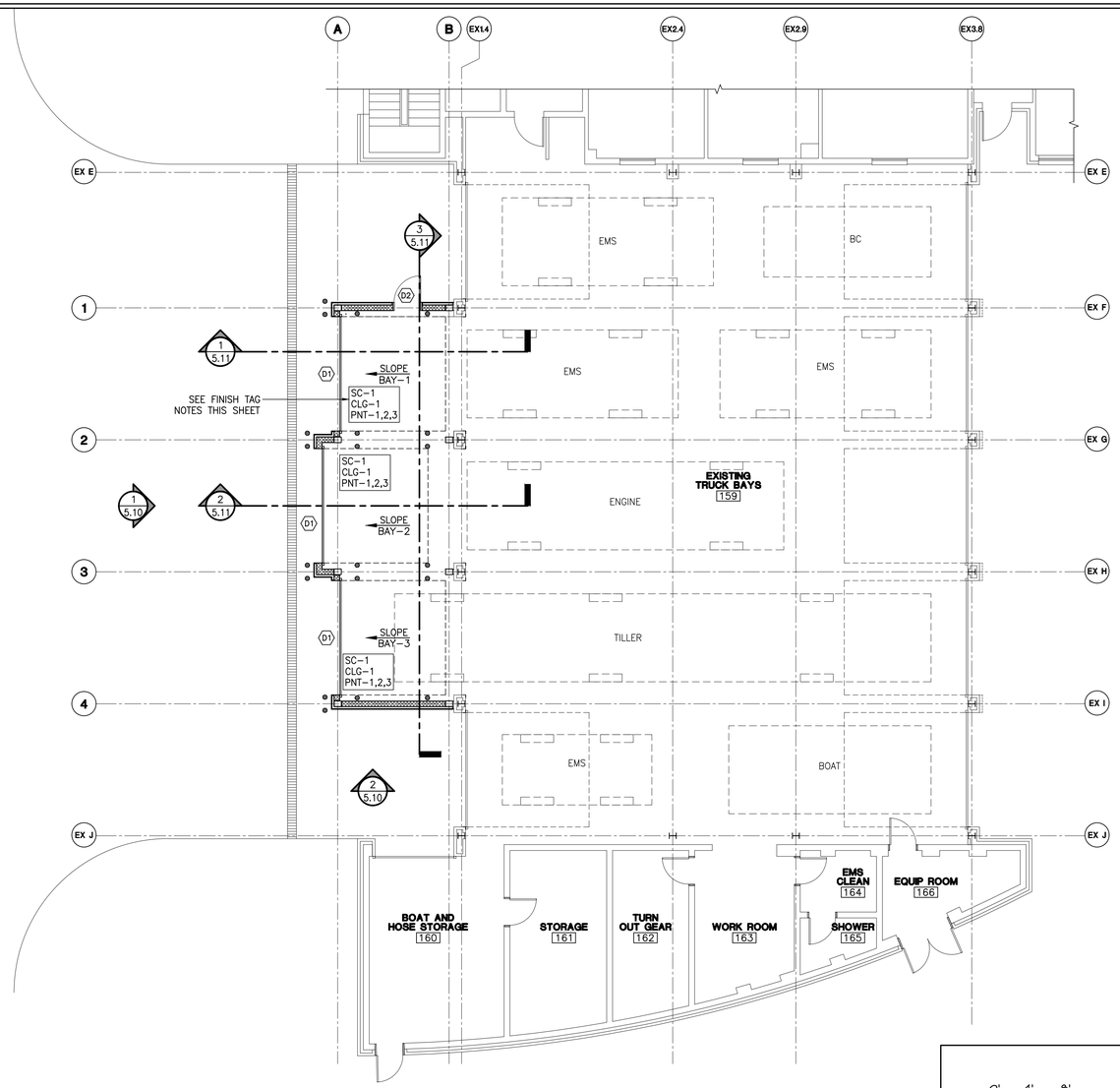


## 2 FLOOR PLAN (FINISH NOTES & TAGS)
SCALE: 1/8" = 1'-0"

0' 4' 8' 16'
1/8" GRAPHIC SCALE

TRUE NORTH
PLAN NORTH

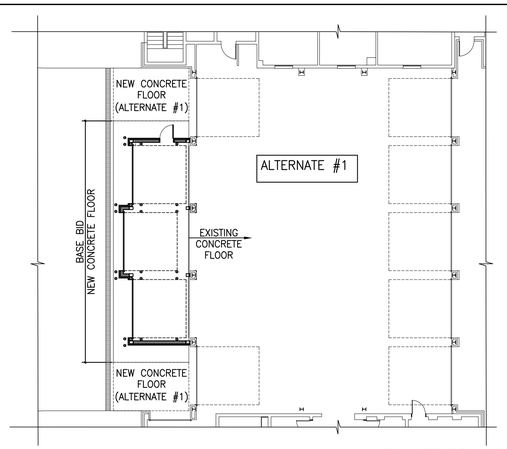


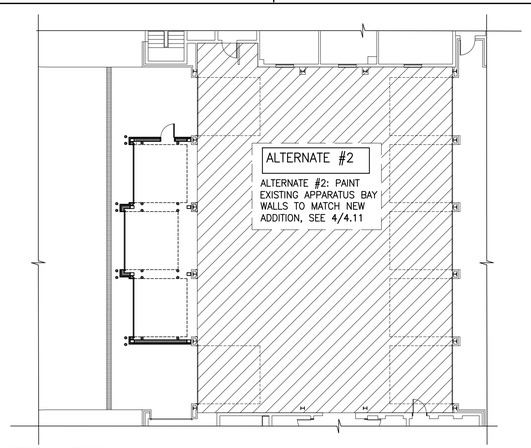


## 3 FINISH PLAN ALTERNATES
SCALE: 1/16" = 1'-0"

# PLAN GENERAL NOTES

1. ALL CONTRACTORS MUST MAKE ON SITE VISITATIONS TO PROJECT SITE PRIOR TO BIDDING TO FAMILIARIZE THEMSELVES WITH THE EXTENT OF CONSTRUCTION.
2. DISCREPANCIES: THE CONTRACTOR SHALL INFORM THE ARCHITECT IN WRITING OF ANY DISCREPANCIES OR OMISSIONS NOTED ON THE DRAWINGS OR IN THE SPECIFICATIONS OR OF ANY VARIATIONS NEEDED IN ORDER TO CONFORM TO CODES, RULES AND REGULATIONS. UPON RECEIPT OF SUCH INFORMATION, THE ARCHITECT WILL SEND WRITTEN INSTRUCTION TO ALL CONCERNED. ANY SUCH DISCREPANCY, OMISSION, OR VARIATION NOT REPORTED SHALL BE THE RESPONSIBILITY OF THE CONTRACTOR, AND WORK SHALL BE PERFORMED IN A MANNER DIRECTED BY THE ARCHITECT.
3. THE GENERAL CONTRACTOR SHALL BE RESPONSIBLE FOR THE PROTECTION OF PERSONS USING THE SURROUNDING FACILITIES WHO COME IN CONTACT WITH THE AREA OF CONSTRUCTION. HE SHALL PROPERLY BARRICADE THE AREA TO PREVENT INTRUSION BY PERSONS NOT ASSOCIATED WITH CONSTRUCTION.
4. DRAWING SCALES: THESE DRAWINGS ARE PREPARED TO THE SCALES NOTED, HOWEVER, DIMENSIONS ARE NOT TO BE DERIVED BY SCALING THE PLANS, SECTIONS OR DETAILS. IF THERE IS ANY QUESTION ABOUT DETAILS OR DIMENSIONS, CONTACT THE ARCHITECT FOR INFORMATION PRIOR TO STARTING WORK.
5. ALL NOTES APPLY TO ALL DRAWINGS AND ALL TRADES. IT IS THE RESPONSIBILITY OF ALL CONTRACTORS AND TRADES TO COORDINATE THE INSTALLATION OF THEIR WORK WITH THE INSTALLATION OF OTHER CONTRACTORS AND TRADES.
6. THE REQUIREMENTS OF THE DRAWINGS, GENERAL REQUIREMENTS AND ALL ITEMS OF THE CONTRACT DOCUMENTS ARE EQUALLY BINDING ON ALL CONTRACTORS AND TRADES. EACH CONTRACTOR IS REQUIRED TO MAINTAIN FULL SETS OF THE CONTRACT DOCUMENTS FOR HIS EMPLOYEES USE ON THE PROJECT TO ASSURE THAT ALL WORK IS PROPERLY COORDINATED AND INSTALLED WITH THE WORK OF OTHER CONTRACTORS AND TRADES.
7. CONTRACTOR SHALL MEET WITH THE ARCHITECT PRIOR TO CONSTRUCTION OF THE PROJECT TO REVIEW ALL EXISTING CONDITIONS AND THE EXACT EXTENT OF THE WORK TO BE COMPLETED.
8. ALL WORK SHALL BE IN ACCORDANCE WITH THE STATE OF NORTH CAROLINA BUILDING CODE AND ALL OTHER LOCAL CODES AND REGULATIONS HAVING JURISDICTION.
9. THE GENERAL CONTRACTOR SHALL BE RESPONSIBLE FOR PROTECTING ALL EXISTING CONSTRUCTION AROUND THE SITE WHICH WILL REMAIN. ANY DAMAGES SHALL BE REPAIRED TO THE OWNERS' SATISFACTION AT NO COST.
10. FRAMING LUMBER IN CONTACT WITH MASONRY, CONCRETE, OR STEEL SHALL BE ALL PRESSURE TREATED.
11. GENERAL CONTRACTOR SHALL PROVIDE ALL MISCELLANEOUS LOOSE STEEL LINTELS AS REQUIRED WHERE MECHANICAL, PLUMBING, OR ELECTRICAL EQUIPMENT PASS THRU WALLS OR OVER ANY BUILT-IN ITEMS IN MASONRY WALLS.
12. PROVIDE BLOCKING IN METAL STUD WALLS AS REQUIRED FOR ALL SUSPENDED ITEMS INCLUDING BUT NOT LIMITED TO PLUMBING, MECHANICAL, ELECTRICAL, ETC. – COORDINATE WITH OTHER TRADES.
13. PROVIDE MASONRY CONTROL JOINTS AS REQUIRED.
14. DIMENSIONS SHOWN ON FLOOR PLANS ARE TO FACE OF CMU UNLESS NOTED OTHERWISE. SEE SHEET 4.10 FOR ALL DIMENSIONS.

# IMPORTANT NOTE

THE CONTRACT DOCUMENTS WERE PREPARED BASED ON EXISTING DRAWINGS PROVIDED TO THE ARCHITECT BY THE OWNER AND BASED ON FIELD OBSERVATIONS. ACTUAL FIELD CONDITIONS MAY VARY AND THE CONTRACTOR IS RESPONSIBLE FOR FIELD VERIFYING ALL CONDITIONS AND COORDINATING ANY VARIANCES WITH THE ARCHITECT PRIOR TO DEMOLITION OR CONSTRUCTION AS THE CASE MAY BE.

# PLAN LEGEND

8" CMU AND BRICK WYTHE EXTERIOR WALLS, SEE STRUCTURAL DRAWINGS FOR REINFORCEMENT.

6" METAL STUD AND BRICK WYTHE EXTERIOR WALLS, SEE STRUCTURAL DRAWINGS FOR STUD SPACING AND BRACING.

D1 DOOR TAG

# FINISH ELEVATION

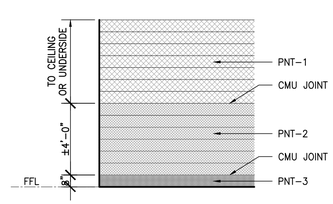


NOTE:
- ALIGN COLOR TRANSITION TO THE CMU JOINT.
- PROVIDE CONTINUOUS PERIMETER CAULK BETWEEN THE FLOORS & WALLS, USE "DOWSIL NS PARKING STRUCTURE SEALANT".

## 4 TYP. WALL ELEVATION
SCALE: 1/4" = 1'-0"

# GENERAL NOTES

ALL NOTES APPLY TO ALL DRAWINGS AND ALL TRADES. IT IS THE RESPONSIBILITY OF ALL CONTRACTORS AND TRADES TO COORDINATE THE INSTALLATION OF THEIR WORK WITH THE INSTALLATION OF WORK BY ALL OTHER CONTRACTORS AND TRADES. THE REQUIREMENTS OF THE DRAWINGS, GENERAL REQUIREMENTS AND ALL ITEMS OF THE CONTRACT DOCUMENTS ARE EQUALLY BINDING ON ALL CONTRACTORS AND TRADES. EACH CONTRACTOR IS REQUIRED TO MAINTAIN FULL SETS OF THE CONTRACT DOCUMENTS FOR HIS EMPLOYEES USE ON THE PROJECT TO ASSURE THAT ALL WORK IS PROPERLY COORDINATED AND INSTALLED WITH THE WORK OF OTHER CONTRACTORS AND TRADES.

WHENEVER THERE ARE DISCREPANCIES BETWEEN DRAWINGS, OR BETWEEN THE DRAWINGS AND SPECIFICATIONS, OR CONFLICTS WITHIN THE SPECIFICATIONS AND/OR DRAWINGS, AND SUCH DISCREPANCY IS NOT CALLED TO THE ARCHITECT'S ATTENTION IN TIME TO PERMIT CLARIFICATION BY ADDENDUM, THE CONTRACTOR SHALL BASE HIS BID UPON PROVIDING THE BETTER QUALITY OR GREATER OF WORK OR MATERIAL CALLED FOR, SHALL SUBMIT A WRITTEN STATEMENT WITH HIS PROPOSAL NOTING SUCH DISCREPANCIES, AND SHALL SO FURNISH AND INSTALL SUCH BETTER QUALITY OR GREATER QUANTITY UNLESS OTHERWISE ORDERED IN WRITING.

Project No.
1667

Date Printed:
11.12.2020
Drawn by:
IS/JJ
Checked by:
JRS
Revisions

© STEWART-COOPER-NEWELL ARCHITECTS, P.A.

THIS DRAWING IS THE PROPERTY OF STEWART-COOPER-NEWELL ARCHITECTS, P.A. AND IS SUBJECT TO FEDERAL COPYRIGHT LAWS. THIS DRAWING MAY NOT BE REPRODUCED, PUBLISHED OR USED IN ANY WAY WITHOUT THE WRITTEN PERMISSION OF STEWART-COOPER-NEWELL ARCHITECTS, P.A.

STEWART-COOPER-NEWELL ARCHITECTS, P.A.
REGISTERED ARCHITECTURAL CORPORATION
LIC. NO. 51313
NORTH CAROLINA
GASTONIA N.C.

Stewart · Cooper · Newell Architects
719 East Second Avenue
Gastonia, NC 28054
Phone: 704.865.6311
Fax: 704.865.0046
1.800.671.0621
www.scn-architects.com

JAMES ROBERT STUMBO
REGISTERED ARCHITECT
5728
10/21/2020
NORTH CAROLINA
HICKORY N.C.

BAY EXPANSION FOR
GREENVILLE FIRE RESCUE #1
GREENVILLE, NC

FLOOR PLAN & FINISHES
with NOTES & TAGS

Sheet No.
4.11

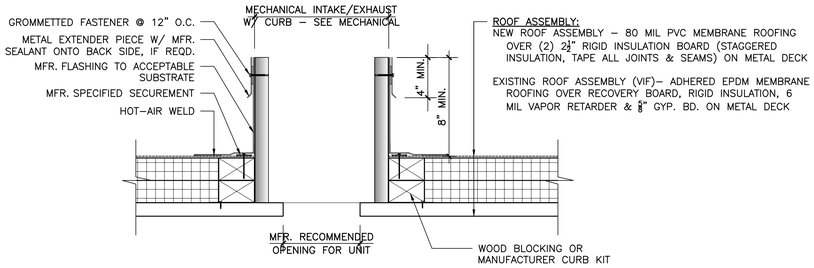


## 1 TYP. ROOF PENETRATION DETAIL

SCALE: NOT TO SCALE

ROOF PENETRATION NOTES:

1) ROOF INSTALLER TO FLASH ALL PENETRATIONS THROUGH ROOF PER MANUFACTURER'S INSTRUCTIONS TO MAINTAIN A WATERTIGHT SEAL.
2) FOLLOW MANUFACTURER'S INSTRUCTIONS FOR CURB INSTALLATION.
3) SEE MECHANICAL DRAWINGS FOR LOCATION.
4) METAL EXTENDER PIECE IS REQUIRED IF EXISTING COUNTERFLASHING IS CONTAMINATED AND OR COUNTERFLASHING FASCIA IS LESS THAN 4 INCHES WIDE. FASTENED 12 INCHES O.C. WITH GROMMETTED FASTENER.
5) VAPOR RETARDER SHALL BE SEALED AT EDGES, WHERE APPLICABLE.

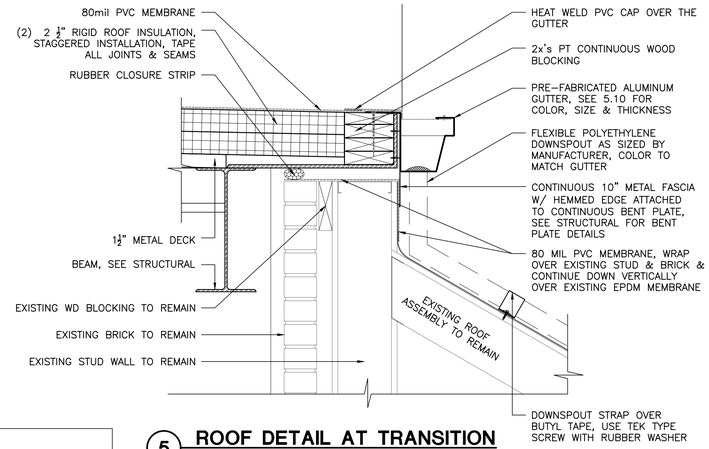


## 5 ROOF DETAIL AT TRANSITION

SCALE: 1–1/2" = 1'–0"

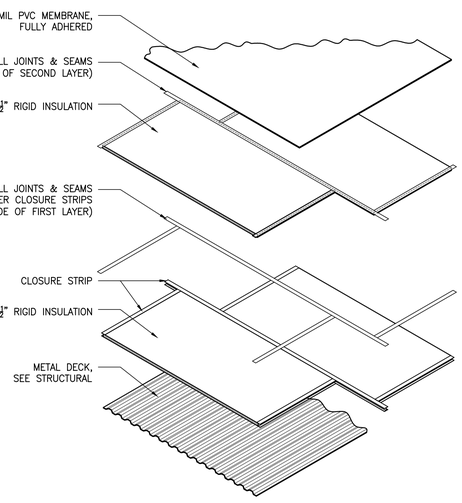


## 2 EXPLODED VIEW DETAIL @ ROOF INSULATION LAYOUT

SCALE: NOT TO SCALE

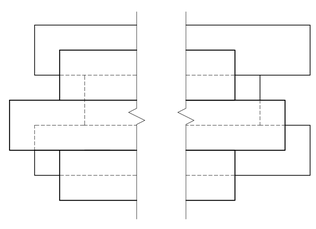

## 3 DETAIL @ ROOF INSULATION LAYOUT

SCALE: NOT TO SCALE

BUILDING ENVELOPE:

GC TO ENSURE THAT THE BUILDING ENVELOPE IS COMPLETELY SEALED FROM THE EXTERIOR. USE SPRAY FOAM INSULATION AS NECESSARY OR REQUIRED.

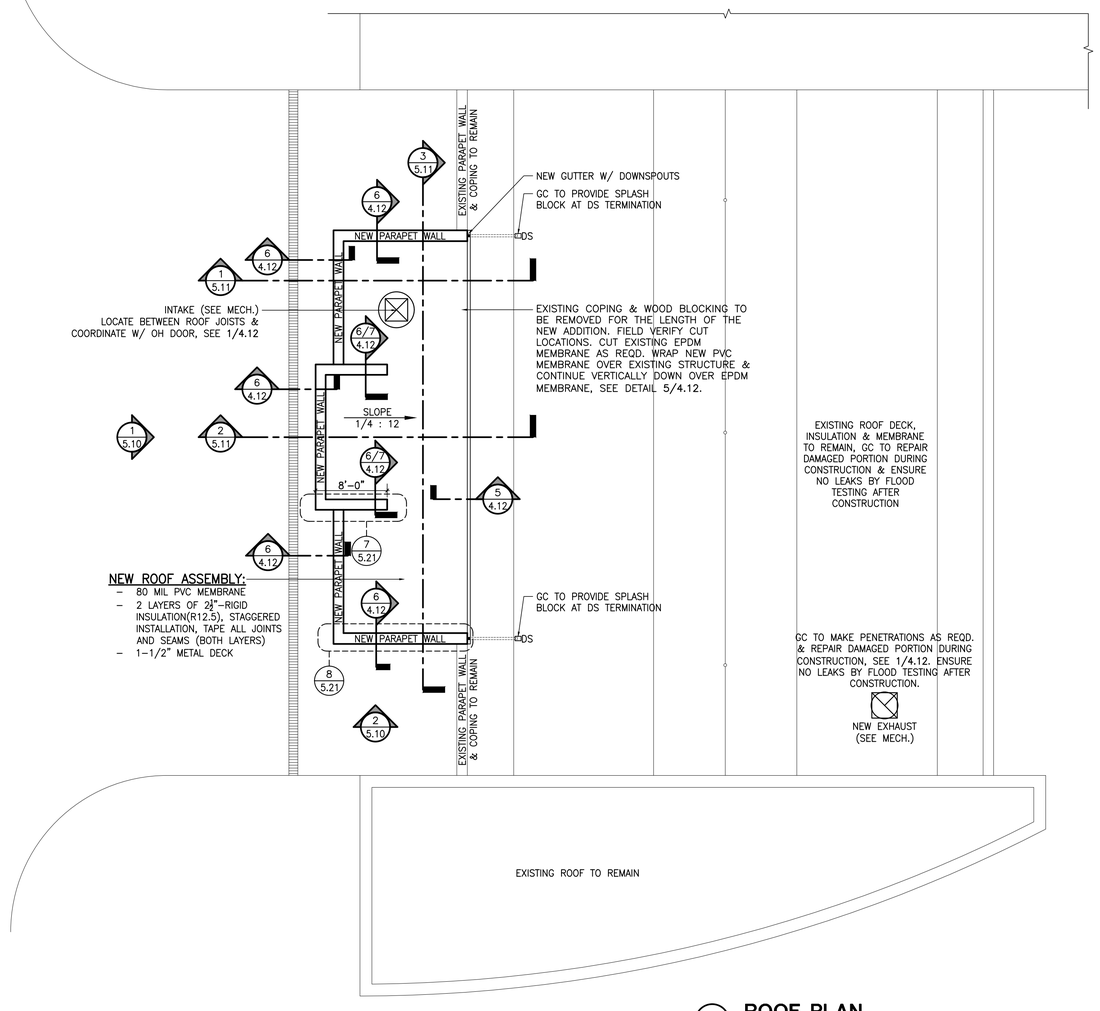


## 4 ROOF PLAN

SCALE: 1/8" = 1'–0"

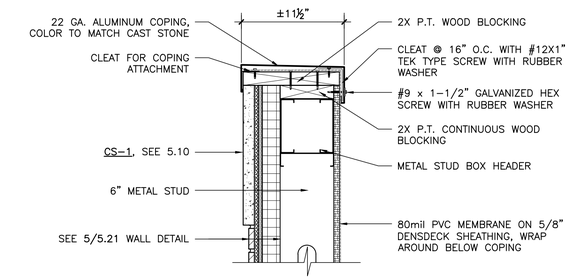


## 6 TYP. PARAPET DETAIL

SCALE: 1–1/2" = 1'–0"

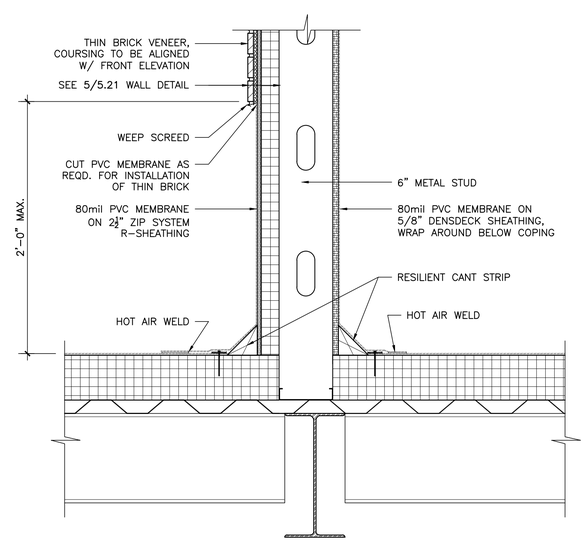


## 7 PARAPET DETAIL

SCALE: 1–1/2" = 1'–0"

## ROOFING NOTES

1. PROVIDE ALL FLASHING MATERIALS AND METHODS AS APPROVED BY THE MANUFACTURER FOR A FULL WATERPROOFING SYSTEM.
2. IT IS THE GENERAL CONTRACTOR'S RESPONSIBILITY TO REVIEW OTHER DRAWINGS FOR ROOF PENETRATIONS NOT SHOWN.
3. PAINT ALL ROOF PENETRATION PIPES TO MATCH ROOF COLOR.
4. PROVIDE ALUMINUM LEAF GUARD IN ALL NEW GUTTERS.
5. SEE PLUMBING & MECHANICAL DRAWINGS FOR ROOF PENETRATION LOCATIONS.
6. ALL DIMENSIONS TO VIF PRIOR TO ROOF FABRICATION & INSTALLATION.

## WOOD BLOCKING GENERAL NOTES

PROVIDE TYPE 304 STAINLESS STEEL FASTENERS OF SIZE AND TYPE AS RECOMMENDED BY FASTENER MANUFACTURER FOR MATERIAL BEING FASTENED.

PROVIDE PRESSURE TREATED WOOD FOR ALL CONCEALED BLOCKING, ROOF FRAMING AND BLOCKING, WOOD CANTS, NAILERS, CURBS, EQUIPMENT SUPPORT BASES, AND SIMILAR MEMBERS IN CONNECTION WITH ROOFING

0' 4' 8' 16'
1/8" GRAPHIC SCALE

TRUE NORTH PLAN NORTH

## GENERAL NOTES

ALL NOTES APPLY TO ALL DRAWINGS AND ALL TRADES. IT IS THE RESPONSIBILITY OF ALL CONTRACTORS AND TRADES TO COORDINATE THE INSTALLATION OF THEIR WORK WITH THE INSTALLATION OF WORK BY ALL OTHER CONTRACTORS AND TRADES. THE REQUIREMENTS OF THE DRAWINGS, GENERAL REQUIREMENTS AND ALL ITEMS OF THE CONTRACT DOCUMENTS ARE EQUALLY BINDING ON ALL CONTRACTORS AND TRADES. EACH CONTRACTOR IS REQUIRED TO MAINTAIN FULL SETS OF THE CONTRACT DOCUMENTS FOR HIS EMPLOYEES USE ON THE PROJECT TO ASSURE THAT ALL WORK IS PROPERLY COORDINATED AND INSTALLED WITH THE WORK OF OTHER CONTRACTORS AND TRADES.

WHENEVER THERE ARE DISCREPANCIES BETWEEN DRAWINGS, OR BETWEEN THE DRAWINGS AND SPECIFICATIONS, OR CONFLICTS WITHIN THE SPECIFICATIONS AND/OR DRAWINGS, AND SUCH DISCREPANCY IS NOT CALLED TO THE ARCHITECT'S ATTENTION IN TIME TO PERMIT CLARIFICATION BY ADDENDUM, THE CONTRACTOR SHALL BASE HIS BID UPON PROVIDING THE BETTER QUALITY OR GREATER OF WORK OR MATERIAL CALLED FOR, SHALL SUBMIT A WRITTEN STATEMENT WITH HIS PROPOSAL NOTING SUCH DISCREPANCIES, AND SHALL SO FURNISH AND INSTALL SUCH BETTER QUALITY OR GREATER QUANTITY UNLESS OTHERWISE ORDERED IN WRITING.

Project No.
1667

Date Printed:
11.12.2020
Drawn by:
IS/JJ
Checked by:
JRS
Revisions

© STEWART–COOPER–NEWELL ARCHITECTS, P.A.

THIS DRAWING IS THE PROPERTY OF STEWART–COOPER–NEWELL ARCHITECTS, P.A. AND IS SUBJECT TO FEDERAL COPYRIGHT LAWS. THIS DRAWING MAY NOT BE REPRODUCED, PUBLISHED OR USED IN ANY WAY WITHOUT THE WRITTEN PERMISSION OF STEWART–COOPER–NEWELL ARCHITECTS, P.A.

STEWART-COOPER-NEWELL ARCHITECTS, P.A. REGISTERED ARCHITECTURAL CORPORATION LIC. NO. 51313 NORTH CAROLINA GASTONIA, N.C.

Stewart · Cooper · Newell Architects
719 East Second Avenue
Gastonia, NC 28054
Phone: 704.865.6311
Fax: 704.865.0046
1.800.671.0621
www.scn-architects.com

JAMES ROBERT STUMBO REGISTERED ARCHITECT 5728 10/21/2020 NORTH CAROLINA HICKORY, N.C.

BAY EXPANSION FOR
GREENVILLE FIRE RESCUE #1
GREENVILLE, NC

ROOF PLAN, NOTES & DETAILS

Sheet No.
4.12

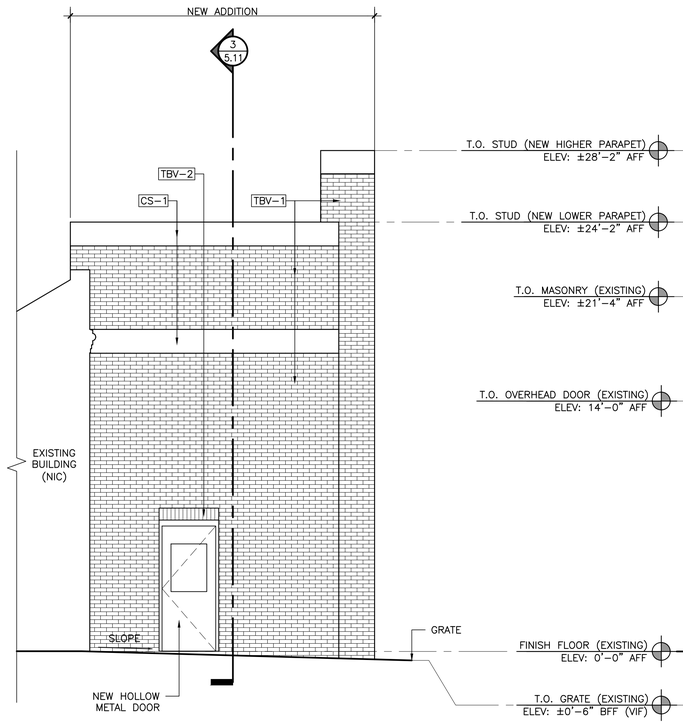


## 2 PARTIAL LEFT-SIDE ELEVATION

SCALE: 1/8" = 1'-0"

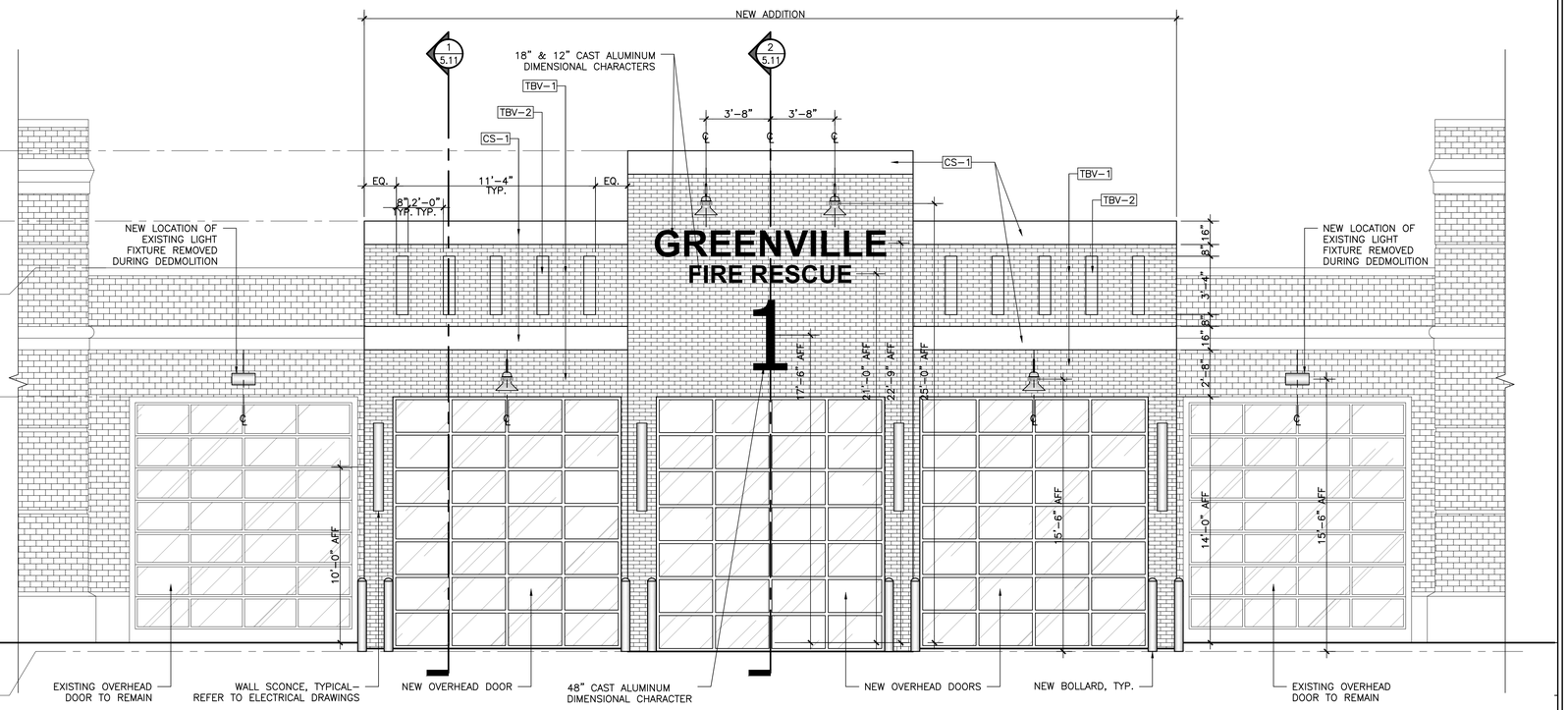


## 1 PARTIAL FRONT ELEVATION

SCALE: 1/8" = 1'-0"

# E X T E R I O R  F I N I S H E S

## THIN BRICK VENEER WALLS

TBV-1 TAYLOR CLAY PRODUCTS, 317 RED, MODULAR THIN BRICK, WIRECUT. (FIELD BRICK) PROVIDE CORNERS & EDGE CAPS AS REQD.

TBV-2 TAYLOR CLAY PRODUCTS, PEARL GRAY, MODULAR THIN BRICK, SMOOTH. (ACCENT BRICK)

NOTE:

COORDINATE THE ALIGNMENT OF NEW BRICK MORTAR JOINT WITH OLD BRICK MORTAR JOINTS.

## PRE-CAST STONES

CS-1 READING ROCK CAST THIN ARCHITECTURAL STONE, CHARLOTTE TAN, SMOOTH PA-6810-24.

## MORTAR - TYPE 'S'

FOR THIN BRICK: USE STANDARD NATURAL GRAY COLOR.
FOR CAST STONE: MORTAR COLOR TO MATCH CAST STONE.
MORTAR JOINTS - CONCAVE ROUND TOOLED JOINTS
MODIFIED ASTM C270 TYPE N OR S MORTAR.

## PVC ROOF (80 mil)

80 MIL SIKA SARNAFIL PVC ROOF MEMBRANE (G410-80), FULLY ADHERED, COLOR: REFLECTIVE GRAY

## ALUMINUM COPING & FLASHING

MBCI 22 GA. ALUMINUM COPING (COLOR TO MATCH CAST STONE)

## ALUMINUM GUTTERS & DOWNSPOUTS

COLOR & GAUGE TO MATCH ALUMINUM COPING. PROVIDE PERFORATED ALUMINUM LEAF GUARD FOR ALL GUTTERS (GUTTER SIZE: 4"WX6"H).

## EXTERIOR SIGN

CAST ALUMINUM DIMENSIONAL CHARACTERS, COLOR: TBD DURING CONSTRUCTION.

## ELEVATION KEY PLAN

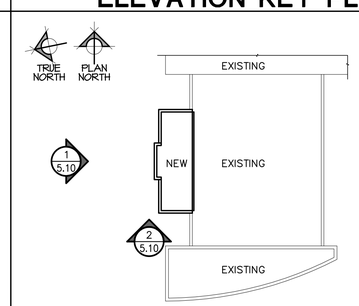


Project No.
1667

Date Printed:
11.12.2020
Drawn by:
IS/JJ
Checked by:
JRS
Revisions

© STEWART-COOPER-NEWELL ARCHITECTS, P.A.

THIS DRAWING IS THE PROPERTY OF STEWART-COOPER-NEWELL ARCHITECTS, P.A. AND IS SUBJECT TO FEDERAL COPYRIGHT LAWS. THIS DRAWING MAY NOT BE REPRODUCED, PUBLISHED OR USED IN ANY WAY WITHOUT THE WRITTEN PERMISSION OF STEWART-COOPER-NEWELL ARCHITECTS, P.A.

STEWART-COOPER-NEWELL ARCHITECTS, P.A.
REGISTERED ARCHITECTURAL CORPORATION
LIC. NO. 51313
NORTH CAROLINA
GASTONIA N.C.

Stewart · Cooper · Newell Architects
719 East Second Avenue
Gastonia, NC 28054
Phone: 704.865.6311
Fax: 704.865.0046
1.800.671.0621
www.scn-architects.com

JAMES ROBERT STUMBO
REGISTERED ARCHITECT
5728
10/21/2020
NORTH CAROLINA
HICKORY N.C.

BAY EXPANSION FOR
GREENVILLE FIRE RESCUE #1
GREENVILLE, NC

BUILDING ELEVATIONS & DOOR TYPES

Sheet No.
5.10

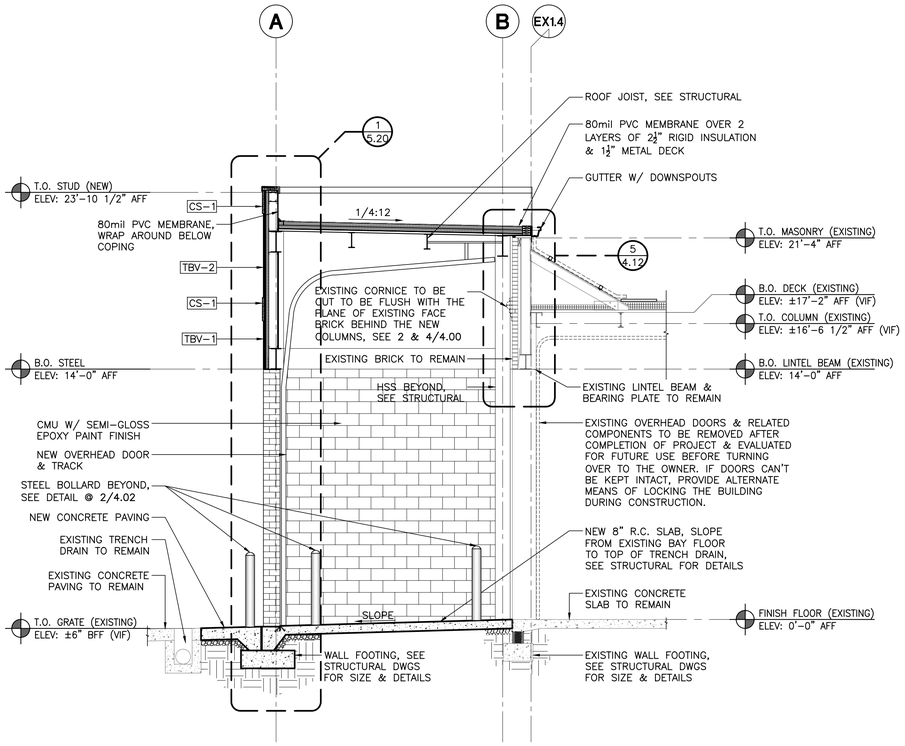


1 **BUILDING SECTION**
SCALE: 1/4" = 1'-0"

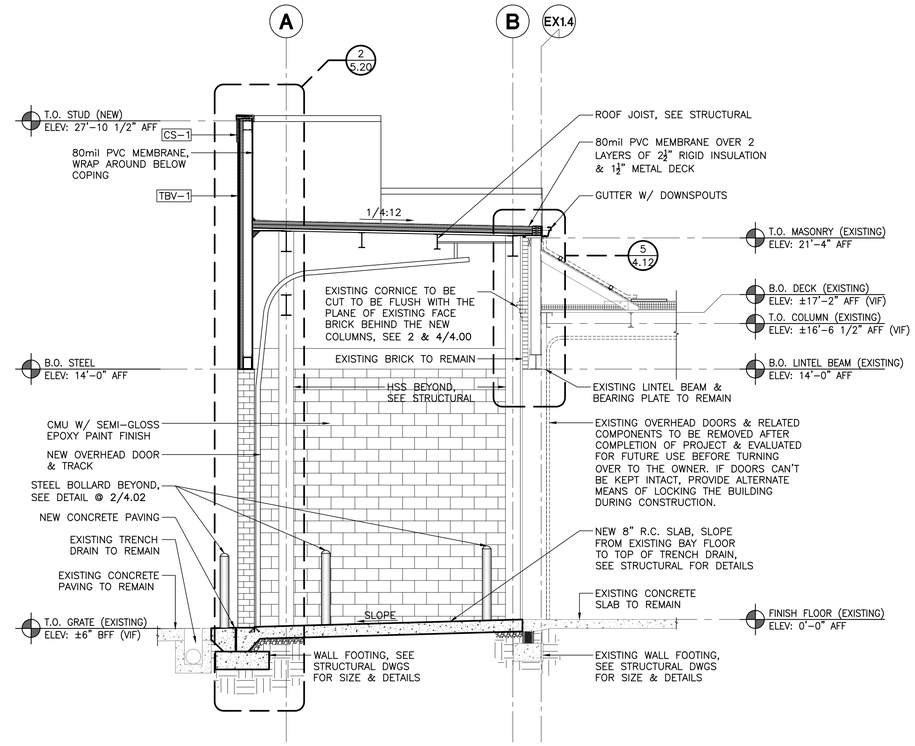


2 **BUILDING SECTION**
SCALE: 1/4" = 1'-0"

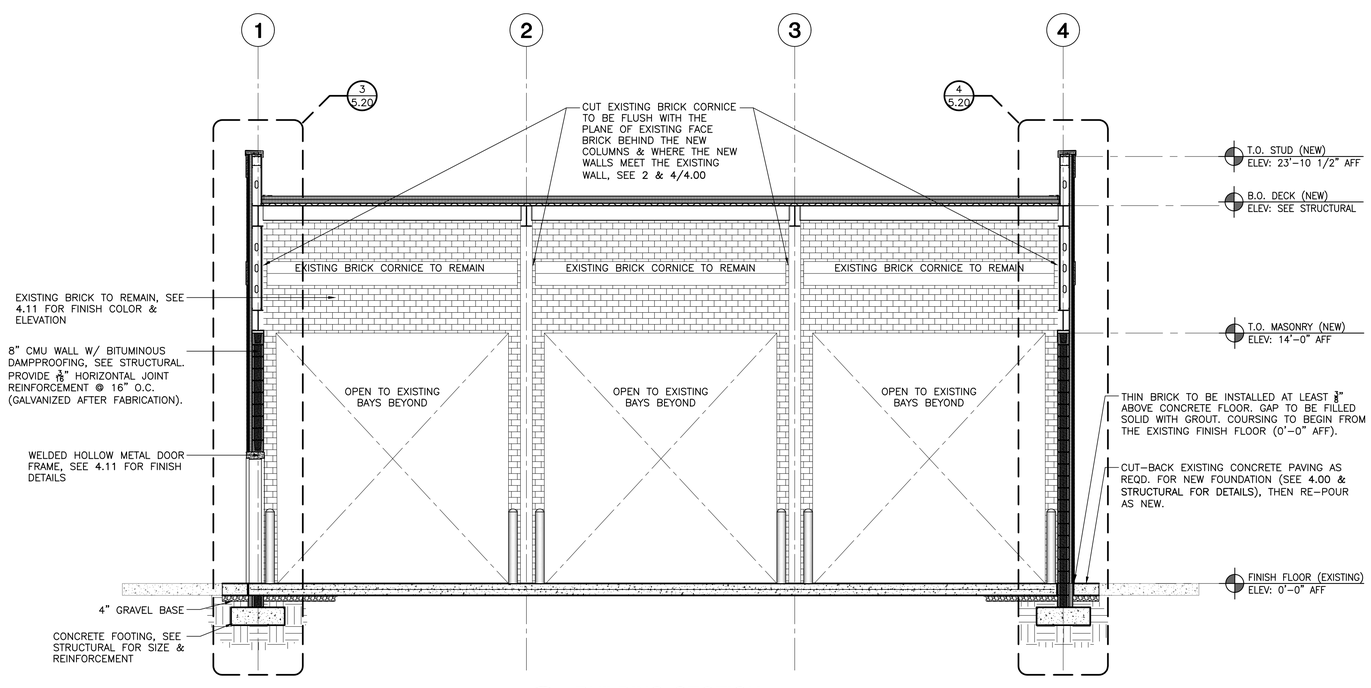


3 **BUILDING SECTION**
SCALE: 1/4" = 1'-0"

IMPORTANT NOTE:
FINISH FLOOR REFERS TO ELEVATION AT EXISTING FINISH FLOOR (0'-0"). ALL MEASUREMENTS ARE TAKEN FROM ABOVE EXISTING FINISH FLOOR (AFF) OR BELOW EXISTING FINISH FLOOR (BFF).

## KEY PLAN

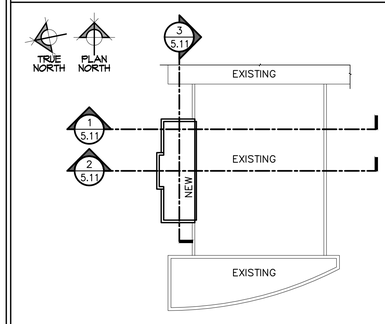


## GENERAL NOTES

ALL NOTES APPLY TO ALL DRAWINGS AND ALL TRADES. IT IS THE RESPONSIBILITY OF ALL CONTRACTORS AND TRADES TO COORDINATE THE INSTALLATION OF THEIR WORK WITH THE INSTALLATION OF WORK BY ALL OTHER CONTRACTORS AND TRADES. THE REQUIREMENTS OF THE DRAWINGS, GENERAL REQUIREMENTS AND ALL ITEMS OF THE CONTRACT DOCUMENTS ARE EQUALLY BINDING ON ALL CONTRACTORS AND TRADES. EACH CONTRACTOR IS REQUIRED TO MAINTAIN FULL SETS OF THE CONTRACT DOCUMENTS FOR HIS EMPLOYEES USE ON THE PROJECT TO ASSURE THAT ALL WORK IS PROPERLY COORDINATED AND INSTALLED WITH THE WORK OF OTHER CONTRACTORS AND TRADES.

WHENEVER THERE ARE DISCREPANCIES BETWEEN DRAWINGS, OR BETWEEN THE DRAWINGS AND SPECIFICATIONS, OR CONFLICTS WITHIN THE SPECIFICATIONS AND/OR DRAWINGS, AND SUCH DISCREPANCY IS NOT CALLED TO THE ARCHITECT'S ATTENTION IN TIME TO PERMIT CLARIFICATION BY ADDENDUM, THE CONTRACTOR SHALL BASE HIS BID UPON PROVIDING THE BETTER QUALITY OR GREATER OF WORK OR MATERIAL CALLED FOR, SHALL SUBMIT A WRITTEN STATEMENT WITH HIS PROPOSAL NOTING SUCH DISCREPANCIES, AND SHALL SO FURNISH AND INSTALL SUCH BETTER QUALITY OR GREATER QUANTITY UNLESS OTHERWISE ORDERED IN WRITING.

Project No.
1667

Date Printed:
11.12.2020
Drawn by:
IS/JJ
Checked by:
JRS
Revisions

© STEWART-COOPER-NEWELL ARCHITECTS, P.A.

THIS DRAWING IS THE PROPERTY OF STEWART-COOPER-NEWELL ARCHITECTS, P.A. AND IS SUBJECT TO FEDERAL COPYRIGHT LAWS. THIS DRAWING MAY NOT BE REPRODUCED, PUBLISHED OR USED IN ANY WAY WITHOUT THE WRITTEN PERMISSION OF STEWART-COOPER-NEWELL ARCHITECTS, P.A.

STEWART-COOPER-NEWELL ARCHITECTS, P.A.
REGISTERED ARCHITECTURE CORPORATION
LIC. NO. 51313
NORTH CAROLINA
GASTONIA N.C.

Stewart · Cooper · Newell Architects
719 East Second Avenue
Gastonia, NC 28054
Phone: 704.865.6311
Fax: 704.865.0046
1.800.671.0621
www.scn-architects.com

JAMES ROBERT STUMBO
REGISTERED ARCHITECT
15728
10/21/2020
NORTH CAROLINA
HICKORY N.C.

BAY EXPANSION FOR
GREENVILLE FIRE RESCUE #1
GREENVILLE, NC

BUILDING SECTIONS

Sheet No.
5.11

IMPORTANT NOTE:
FINISH FLOOR REFERS TO ELEVATION AT EXISTING FINISH FLOOR (0'-0"). ALL MEASUREMENTS ARE TAKEN FROM ABOVE EXISTING FINISH FLOOR (AFF) OR BELOW EXISTING FINISH FLOOR (BFF).

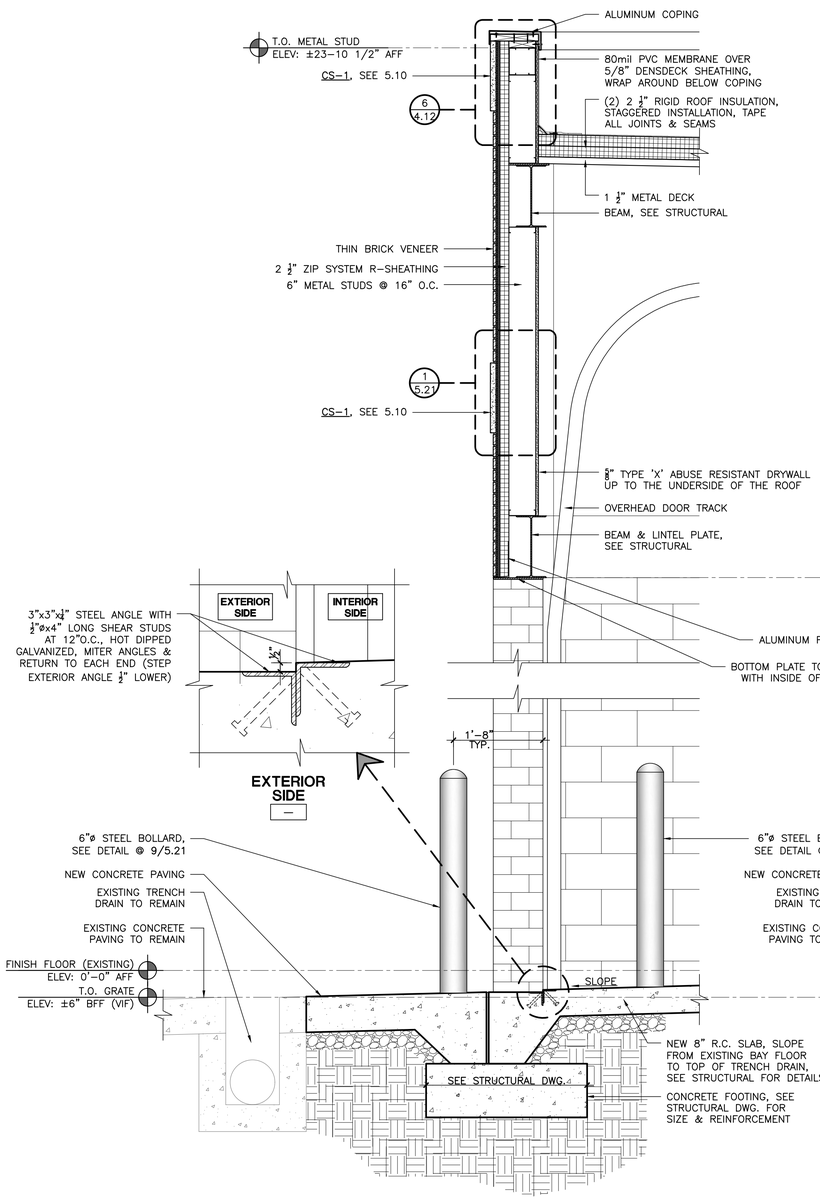


1 WALL SECTION @ OVERHEAD DOOR
SCALE: 3/4" = 1'-0" (BAY-1 & BAY-3)

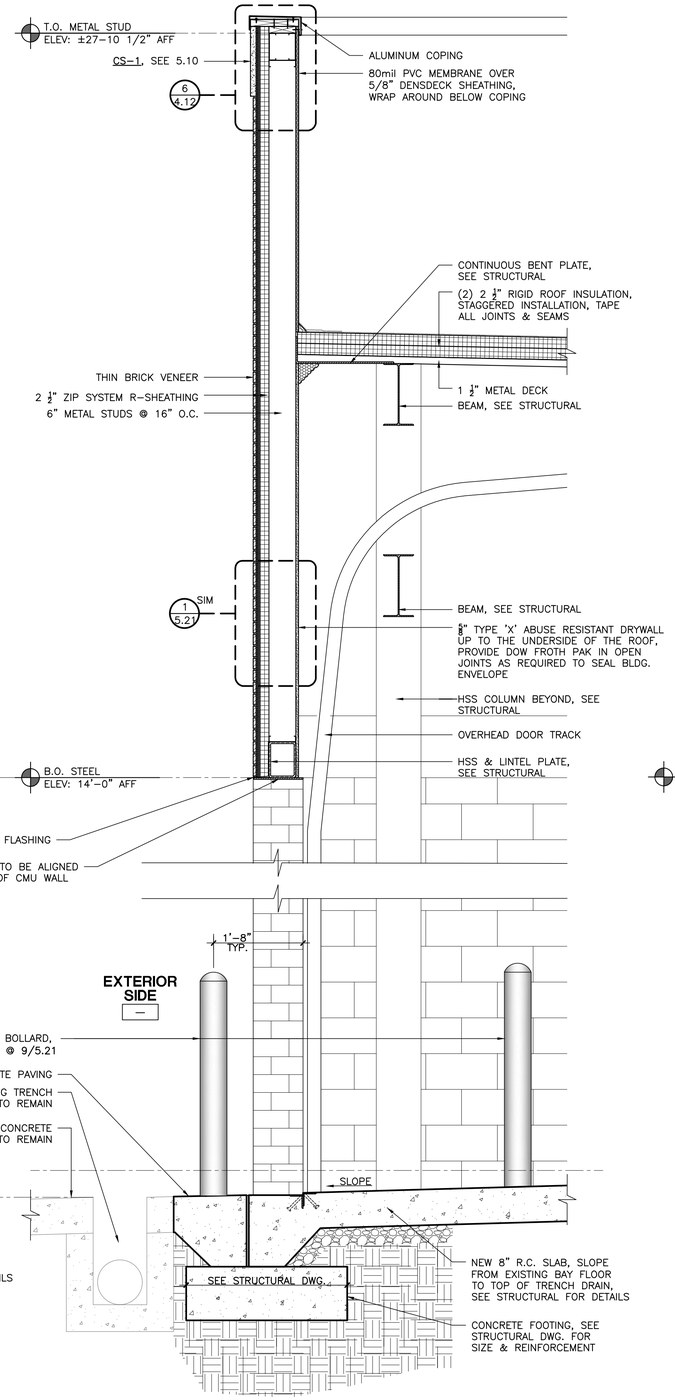


2 WALL SECTION @ OVERHEAD DOOR
SCALE: 3/4" = 1'-0" (BAY-2)

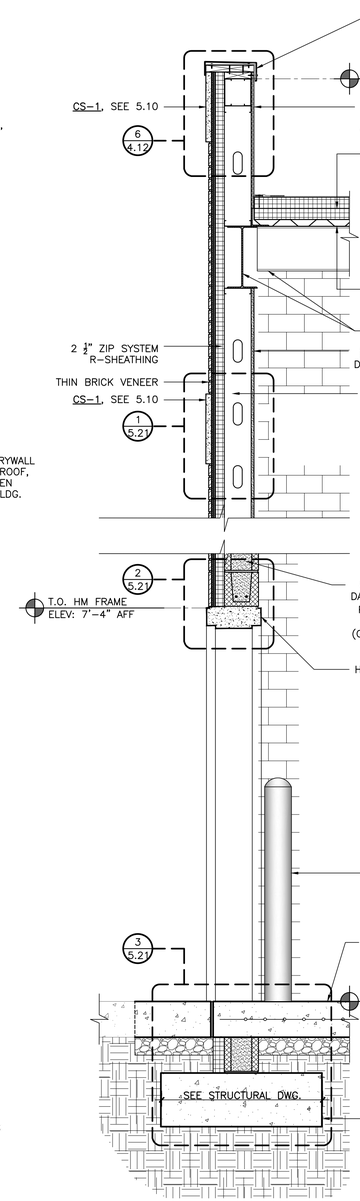


3 END WALL SECTION
SCALE: 3/4" = 1'-0" (HM DOOR)

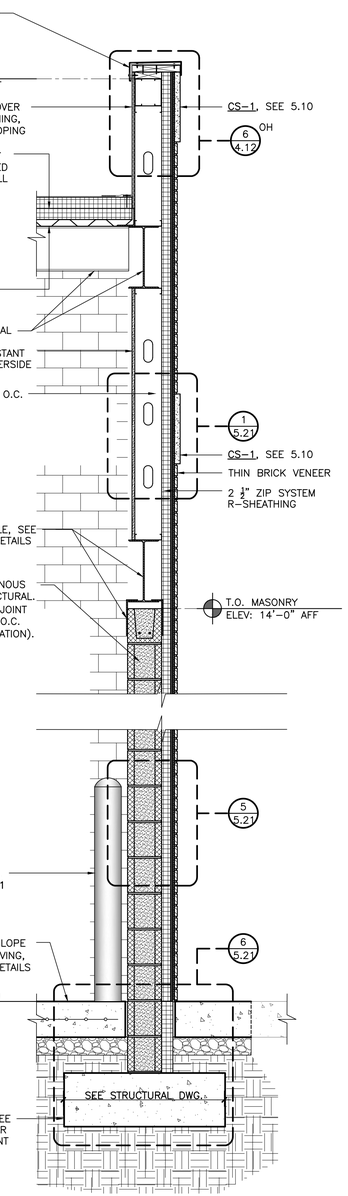


4 END WALL SECTION
SCALE: 3/4" = 1'-0" (TYPICAL)

## GENERAL NOTES

ALL NOTES APPLY TO ALL DRAWINGS AND ALL TRADES. IT IS THE RESPONSIBILITY OF ALL CONTRACTORS AND TRADES TO COORDINATE THE INSTALLATION OF THEIR WORK WITH THE INSTALLATION OF WORK BY ALL OTHER CONTRACTORS AND TRADES. THE REQUIREMENTS OF THE DRAWINGS, GENERAL REQUIREMENTS AND ALL ITEMS OF THE CONTRACT DOCUMENTS ARE EQUALLY BINDING ON ALL CONTRACTORS AND TRADES. EACH CONTRACTOR IS REQUIRED TO MAINTAIN FULL SETS OF THE CONTRACT DOCUMENTS FOR HIS EMPLOYEES USE ON THE PROJECT TO ASSURE THAT ALL WORK IS PROPERLY COORDINATED AND INSTALLED WITH THE WORK OF OTHER CONTRACTORS AND TRADES.

WHENEVER THERE ARE DISCREPANCIES BETWEEN DRAWINGS, OR BETWEEN THE DRAWINGS AND SPECIFICATIONS, OR CONFLICTS WITHIN THE SPECIFICATIONS AND/OR DRAWINGS, AND SUCH DISCREPANCY IS NOT CALLED TO THE ARCHITECT'S ATTENTION IN TIME TO PERMIT CLARIFICATION BY ADDENDUM, THE CONTRACTOR SHALL BASE HIS BID UPON PROVIDING THE BETTER QUALITY OR GREATER OF WORK OR MATERIAL CALLED FOR, SHALL SUBMIT A WRITTEN STATEMENT WITH HIS PROPOSAL NOTING SUCH DISCREPANCIES, AND SHALL SO FURNISH AND INSTALL SUCH BETTER QUALITY OR GREATER QUANTITY UNLESS OTHERWISE ORDERED IN WRITING.

Project No.
1667

Date Printed: 11.12.2020
Drawn by: IS/JJ
Checked by: JRS
Revisions

© STEWART-COOPER-NEWELL ARCHITECTS, P.A.

THIS DRAWING IS THE PROPERTY OF STEWART-COOPER-NEWELL ARCHITECTS, P.A. AND IS SUBJECT TO FEDERAL COPYRIGHT LAWS. THIS DRAWING MAY NOT BE REPRODUCED, PUBLISHED OR USED IN ANY WAY WITHOUT THE WRITTEN PERMISSION OF STEWART-COOPER-NEWELL ARCHITECTS, P.A.

STEWART-COOPER-NEWELL ARCHITECTS, P.A.
REGISTERED ARCHITECTURE CORPORATION
LIC. NO. 51313
NORTH CAROLINA
GASTONIA N.C.

Stewart · Cooper · Newell Architects
719 East Second Avenue
Gastonia, NC 28054
Phone: 704.865.6311
Fax: 704.865.0046
1.800.671.0621
www.scn-architects.com

JAMES ROBERT STUMBO
REGISTERED ARCHITECT
5728
10/21/2020
NORTH CAROLINA
HICKORY N.C.

BAY EXPANSION FOR
GREENVILLE FIRE RESCUE #1
GREENVILLE, NC

WALL SECTIONS & DETAILS

Sheet No.
5.20

IMPORTANT NOTE:
FINISH FLOOR REFERS TO ELEVATION AT EXISTING FINISH FLOOR (0'–0"). ALL MEASUREMENTS ARE TAKEN FROM ABOVE EXISTING FINISH FLOOR (AFF) OR BELOW EXISTING FINISH FLOOR (BFF).

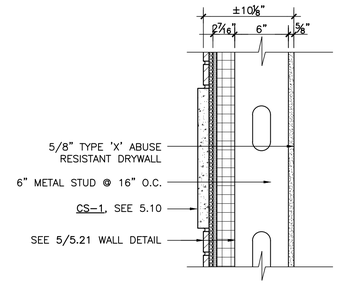


## 1 TYP. WALL SECTION DETAIL
SCALE: 1–1/2" = 1'–0" (UPPER STUD WALL)

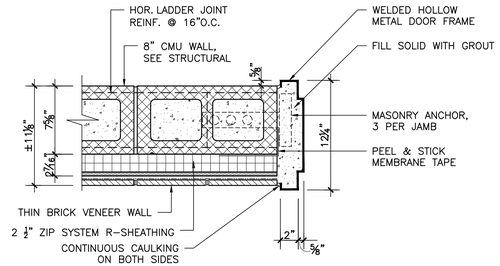


## 4 EXTERIOR DOOR JAMB DETAIL
SCALE: 1–1/2" = 1'–0"

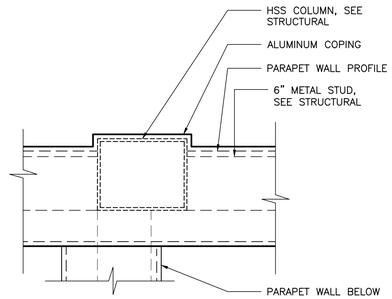


## 7A ENLARGED ALUMINUM COPING
SCALE: 3" = 1'–0"

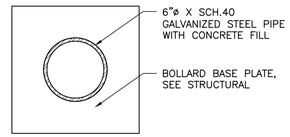


## 9A BOLLARD PLAN SECTION
SCALE: NTS

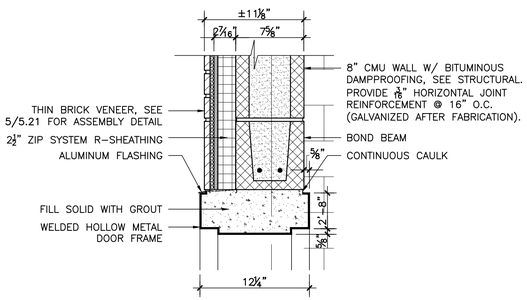


## 2 EXTERIOR DOOR HEAD DETAIL
SCALE: 1–1/2" = 1'–0"

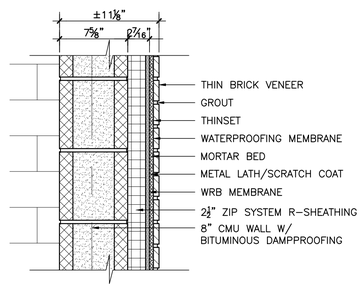


## 5 TYP. WALL SECTION DETAIL
SCALE: 1–1/2" = 1'–0" (LOWER CMU WALL)

**NOTE:** THIN BRICK VENEER TO BE INSTALLED PER MANUFACTURER'S INSTRUCTIONS.

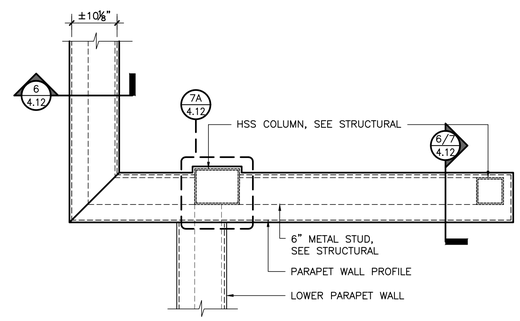


## 7 MIDDLE PARAPET PLAN DETAIL
SCALE: 3/4" = 1'–0"

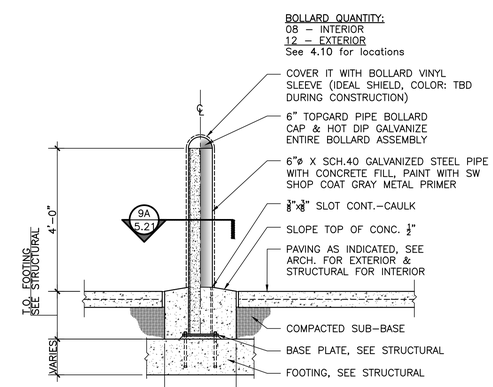


BOLLARD NOTES:
- CONTRACTOR SHALL FILL BOLLARD ENTIRE LENGTH WITH 3000# CONCRETE AFTER SETTING TO THE FOUNDATION, THEN INSTALL THE TOPGARD CAP WHILE BOLLARD CONCRETE FILL IS STILL WET. POUR FOOTING AROUND FILLED BOLLARD.
- SITE LOCATION, PLACE CONCRETE AGAINST UNDISTURBED EARTH. DO NOT OVER EXCAVATE & BACKFILL WITH SOIL.

## 9 STEEL BOLLARD SECTION
SCALE: 1/2" = 1'–0"

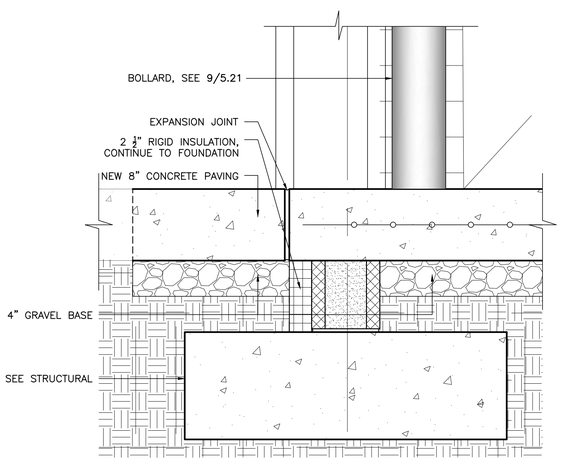


## 3 FOUNDATION DETAIL
SCALE: 1–1/2" = 1'–0" (HM DOOR)

**NOTE:** SEE STRUCTURAL DWGS FOR REINFORCEMENT & GROUTING

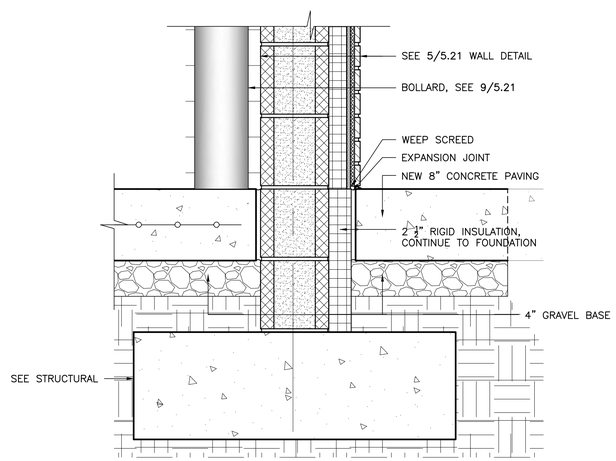


## 6 TYP. FOUNDATION DETAIL
SCALE: 1–1/2" = 1'–0"

**NOTE:** SEE STRUCTURAL DWGS FOR REINFORCEMENT & GROUTING

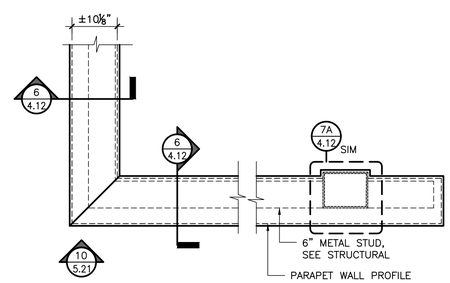


## 8 END PARAPET PLAN DETAIL
SCALE: 3/4" = 1'–0"

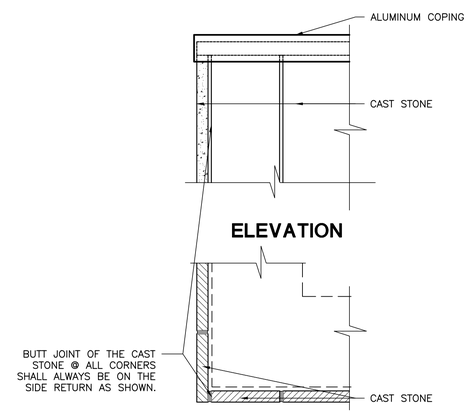


## 10 CAST STONE BUTT JOINT DETAIL, TYP.
SCALE: 1–1/2" = 1'–0"

## GENERAL NOTES

ALL NOTES APPLY TO ALL DRAWINGS AND ALL TRADES. IT IS THE RESPONSIBILITY OF ALL CONTRACTORS AND TRADES TO COORDINATE THE INSTALLATION OF THEIR WORK WITH THE INSTALLATION OF WORK BY ALL OTHER CONTRACTORS AND TRADES. THE REQUIREMENTS OF THE DRAWINGS, GENERAL REQUIREMENTS AND ALL ITEMS OF THE CONTRACT DOCUMENTS ARE EQUALLY BINDING ON ALL CONTRACTORS AND TRADES. EACH CONTRACTOR IS REQUIRED TO MAINTAIN FULL SETS OF THE CONTRACT DOCUMENTS FOR HIS EMPLOYEES USE ON THE PROJECT TO ASSURE THAT ALL WORK IS PROPERLY COORDINATED AND INSTALLED WITH THE WORK OF OTHER CONTRACTORS AND TRADES.

WHENEVER THERE ARE DISCREPANCIES BETWEEN DRAWINGS, OR BETWEEN THE DRAWINGS AND SPECIFICATIONS, OR CONFLICTS WITHIN THE SPECIFICATIONS AND/OR DRAWINGS, AND SUCH DISCREPANCY IS NOT CALLED TO THE ARCHITECT'S ATTENTION IN TIME TO PERMIT CLARIFICATION BY ADDENDUM, THE CONTRACTOR SHALL BASE HIS BID UPON PROVIDING THE BETTER QUALITY OR GREATER OF WORK OR MATERIAL CALLED FOR, SHALL SUBMIT A WRITTEN STATEMENT WITH HIS PROPOSAL NOTING SUCH DISCREPANCIES, AND SHALL SO FURNISH AND INSTALL SUCH BETTER QUALITY OR GREATER QUANTITY UNLESS OTHERWISE ORDERED IN WRITING.

Project No.
1667

Date Printed:
11.12.2020
Drawn by:
IS/JJ
Checked by:
JRS
Revisions

© STEWART–COOPER–NEWELL ARCHITECTS, P.A.

THIS DRAWING IS THE PROPERTY OF STEWART–COOPER–NEWELL ARCHITECTS, P.A. AND IS SUBJECT TO FEDERAL COPYRIGHT LAWS. THIS DRAWING MAY NOT BE REPRODUCED, PUBLISHED OR USED IN ANY WAY WITHOUT THE WRITTEN PERMISSION OF STEWART–COOPER–NEWELL ARCHITECTS, P.A.

STEWART–COOPER–NEWELL ARCHITECTS, P.A. REGISTERED ARCHITECTURAL CORPORATION LIC. NO. 51313 NORTH CAROLINA GASTONIA, N.C.

Stewart·Cooper·Newell Architects
719 East Second Avenue
Gastonia, NC 28054
Phone: 704.865.6311
Fax: 704.865.0046
1.800.671.0621
www.scn-architects.com

JAMES ROBERT STUMBO REGISTERED ARCHITECT 5728 10/31/2020 NORTH CAROLINA HICKORY, N.C.

BAY EXPANSION FOR
GREENVILLE FIRE RESCUE #1
GREENVILLE, NC

SECTION & BOLLARD DETAILS

Sheet No.
5.21

# PLUMBING FIXTURE SCHEDULE

| SYM. | DESCRIPTION | CONNECTIONS (IN.) W | V | CW | HW | SPECIFICATION | REMARKS |
|---|---|---|---|---|---|---|---|
| HY1 | INTERIOR WALL HYDRANT | N/A | N/A | ¾" | N/A | HYDRANT: WOODFORD 26-3/4-BR | SEE NOTE 1 |

NOTES:
1. INSTALL AT 24" ABOVE FINISH FLOOR.

APPROVED MANUFACTURERS:

THE CONTRACTOR IS RESPONSIBLE FOR PROVIDING THE MODEL WHICH MOST CLOSELY MATCHES THE SPECIFIED PRODUCT. PROVIDE PRODUCTS MADE BY ANY OF THE MANUFACTURERS LISTED. NO PRIVATELY LABELED MATERIALS WILL BE ACCEPTED AS EQUALS TO PRODUCTS SPECIFIED HEREIN. ALL FIXTURES OF THE SAME TYPE AND/OR MATERIAL SHALL BE PROVIDED BY A SINGLE MANUFACTURER.

WALL HYDRANTS/HOSE BIBBS — WOODFORD, ZURN, WATTS

# PLUMBING SPECIFICATIONS

INSULATION:

1. PIPE INSULATION SHALL BE MINERAL FIBER INSULATION (ASTM C547) HAVING A MINIMUM K-FACTOR OF 0.27 BTU/H·FT² AT 75 °F. PROVIDE WITH VAPOR RETADER JACKET.
2. INSULATE PIPING SYSTEMS IN ACCORDANCE WITH THE FOLLOWING:

| PIPING SYSTEM | PIPE SIZE | INSULATION |
|---|---|---|
| DOMESTIC COLD WATER SUPPLY | ¼" TO 1¼" | ½" |

3. PIPING INSULATION, JACKETS, COVERINGS, SEALERS, MASTICS, AND ADHESIVES ARE REQUIRED TO MEET A FLAME-SPREAD INDEX OF 25 OR LESS AND A SMOKE-DEVELOPED INDEX OF 50 OR LESS AS TESTED BY ASTM E84 AND SHALL BE PLENUM RATED.

DOMESTIC WATER SYSTEMS:

1. ABOVEGROUND PIPING: PROVIDE TYPE "L" HARD DRAWN SEAMLESS COPPER TUBING (ASTM B88) AND CAST COPPER ALLOY FITTINGS (ASME B16.18). JOINTS SHALL BE LEAD FREE 95/5 TIN/SILVER SOLDER JOINTS (ASTM B32).
2. PROVIDE TWO-PIECE, BRONZE OR BRASS BODY, FULL PORT, 600 PSI WOG, BALL SHUTOFF VALVES WITH BLOWOUT-PROOF STEMS AND ADJUSTABLE PACKING GLANDS. INSTALL VALVES IN A LOCATION THAT PERMITS ACCESS FOR SERVICE WITHOUT DAMAGE TO THE BUILDING OR FINISH MATERIALS. PROVIDE HANDLE EXTENSIONS WHERE INSTALLED IN INSULATED PIPING.
3. PROVIDE UNIONS DOWNSTREAM OF VALVES AND AT EQUIPMENT CONNECTIONS.
4. PROTECT COPPER PIPING AGAINST CONTACT WITH DISSIMILAR METALS. ALL HANGERS, SUPPORTS, ANCHORS, AND CLIPS SHALL BE COPPER OR COPPER-PLATED. WHERE COPPER PIPING IS CARRIED ON TRAPEZE HANGERS WITH OTHER PIPING, PROVIDE A PERMANENT ELECTROLYTIC ISOLATION MATERIAL TO PREVENT CONTACT WITH DISSIMILAR METALS. ELECTRICAL TAPE OR SIMILAR ADHESIVE WRAPPING IS NOT AN APPROVED ISOLATION METHOD.
5. PROTECT COPPER PIPING AGAINST CONTACT WITH ALL MASONRY. WHERE COPPER IS SLEEVED THROUGH MASONRY, PROVIDE COPPER OR RED BRASS SLEEVES. WHERE COPPER MUST BE CONCEALED IN OR AGAINST MASONRY, PROVIDE A HEAVY COATING OF ASPHALTIC ENAMEL ON THE COPPER PIPING AND 15# ASPHALT-SATURATED FELT BETWEEN THE PIPING AND THE MASONRY.
6. DOMESTIC WATER PIPING SHALL BE SLOPED FOR DRAINAGE WITH DRAIN VALVES INSTALLED AT LOW POINTS.
7. AFTER THE DOMESTIC WATER SUPPLY SYSTEM HAS BEEN SUCCESSFULLY TESTED AND APPROVED, THE ENTIRE NEW SYSTEM, INCLUDING VALVES AND ACCESSORIES, SHALL BE DISINFECTED IN ACCORDANCE WITH AWWA C651. DURING THE CHLORINATION PROCESS, ALL VALVES AND ACCESSORIES SHALL BE INDEPENDENTLY AND MANUALLY OPERATED AT LEAST TWICE. AFTER THE CHLORINATION PROCESS, THE SYSTEM SHALL BE FLUSHED UNTIL THE SYSTEM WATER IS EQUAL IN CHEMICAL AND BACTERIOLOGICAL COMPOSITION TO THOSE OF THE PERMANENT SOURCE OF WATER SUPPLY. THE CONTRACTOR SHALL SUBMIT SAMPLES OF THE SYSTEM WATER TO A THIRD-PARTY TESTING LABORATORY FOR ANALYSIS. THE WATER TEST SHALL BE SUBMITTED TO THE AUTHORITY HAVING JURISDICTION FOR REVIEW AND APPROVAL.

# PLUMBING GENERAL NOTES

DEMOLITION REQUIREMENTS:

1. EXISTING INFORMATION SHOWN ON THESE PLANS IS BASED ON RECORD DRAWING INFORMATION PROVIDED BY THE OWNER. THE CONTRACTOR SHALL VISIT THE SITE PRIOR TO BIDDING THE PROJECT TO VERIFY EXISTING CONDITIONS AND DETERMINE THE LEVEL OF DEMOLITION REQUIRED AND INCLUDE ALL NECESSARY PRICING IN THEIR BID. ANY DISCREPANCIES NOTED BETWEEN THE DOCUMENTS AND EXISTING CONDITIONS SHALL BE BROUGHT TO THE ATTENTION OF THE ENGINEER PRIOR TO BIDDING.
2. THE CONTRACTOR SHALL REMOVE EXISTING PLUMBING FIXTURES AND EQUIPMENT AS INDICATED, INCLUDING ASSOCIATED COLD WATER PIPING, UNLESS NOTED OTHERWISE.
3. THE CONTRACTOR SHALL REMOVE UNUSED COLD WATER BRANCH PIPING BACK TO WITHIN TWELVE (12) INCHES OF THE MAIN TO WHICH IT CONNECTS AND TERMINATE WITH SHUTOFF VALVE AND CAP.
4. THE CONTRACTOR SHALL VERIFY THE PROPER OPERATION OF ALL EXISTING EQUIPMENT TO REMAIN PRIOR TO BEGINNING WORK. ANY PROBLEMS SHALL BE BROUGHT TO THE ATTENTION OF THE ENGINEER IMMEDIATELY.
5. PATCH ALL REMOVED PENETRATIONS OF FIRE-RESISTANCE-RATED WALLS, FLOORS, AND PARTITIONS TO MAINTAIN THE REQUIRED F-RATING OF THE EXISTING ASSEMBLY FORMERLY PENETRATED. REFER TO ARCHITECTURAL PLANS FOR WALL, FLOOR, AND PARTITION TYPES.

GENERAL REQUIREMENTS:

1. PLUMBING WORK SHALL BE INSTALLED IN ACCORDANCE WITH THE NORTH CAROLINA PLUMBING CODE AND WITH THE REQUIREMENTS OF THE LOCAL AUTHORITY HAVING JURISDICTION.
2. PROVIDE ALL LABOR, MATERIALS, AND EQUIPMENT REQUIRED FOR THE COMPLETION AND OPERATION OF ALL PLUMBING SYSTEMS IN ACCORDANCE WITH ALL APPLICABLE CODES.
3. APPLY AND PAY FOR ALL NECESSARY PERMITS, FEES, AND INSPECTIONS REQUIRED BY ANY PUBLIC AUTHORITY HAVING JURISDICTION. ACREAGE CHARGES, FACILITIES CHARGES AND BOND PROPERTY ASSESSMENTS ARE NOT TO BE CONSTRUED TO BE A PART OF THIS CONTRACT.
4. COORDINATE ALL PLUMBING PIPING LOCATIONS, ROUGH-IN LOCATIONS, AND EQUIPMENT LOCATIONS WITH OTHER TRADES TO AVOID CONFLICTS AND INTERFERENCES. FINAL PIPING AND EQUIPMENT LOCATIONS SHALL BE A CODE COMPLIANT INSTALLATION FOR ALL TRADES.
5. THE CUTTING, NOTCHING, AND BORING OF HOLES IN STRUCTURAL MEMBERS SHALL BE AS PRESCRIBED BY THE STRUCTURAL ENGINEER.
6. ALL PLUMBING PRODUCTS AND MATERIALS SHALL COMPLY WITH THE REFERENCED STANDARDS, SPECIFICATIONS, AND PERFORMANCE CRITERIA OF THE CONTRACT DOCUMENTS. WHERE REQUIRED, PLUMBING PRODUCTS AND MATERIALS SHALL EITHER BE TESTED BY AN APPROVED THIRD-PARTY TESTING AGENCY OR CERTIFIED BY AN APPROVED THIRD-PARTY CERTIFICATION AGENCY.
7. ALL PIPING SHALL BE MANUFACTURED IN THE UNITED STATES OF AMERICA.
8. ALL VALVES, BACKFLOW PREVENTERS, BOOSTER PUMPS, ETC. SERVING THE DOMESTIC WATER SYSTEM SHALL MEET LEAD FREE STANDARDS PER ANSI/NSF 372 AND NSF 61, ANNEX G.
9. PLUMBING PLANS SHALL NOT BE SCALED. REFERENCE THE ARCHITECTURAL PLANS FOR ALL LOCATIONS OF PLUMBING FIXTURES, WALLS, DOORS, WINDOWS, ETC.
10. PLUMBING PIPING AND SPECIALTIES SHALL BE LOCATED CONCEALED IN WALLS, PARTITIONS OR ABOVE CEILINGS UNLESS NOTED OTHERWISE. PLUMBING PIPING IN EXPOSED AREAS SHALL BE RUN TIGHT TO STRUCTURE. PROVIDE ACCESS DOORS FOR CONCEALED SPECIALTIES.
11. PROVIDE NON-CONDUCTING DIELECTRIC UNIONS WHENEVER CONNECTING DISSIMILAR METALS.
12. ATTACH HANGERS TO STRUCTURE. SUPPORT PIPING IN ACCORDANCE WITH SECTION 308 OF THE NORTH CAROLINA PLUMBING CODE.
13. FIRESTOP ALL PENETRATIONS OF FIRE-RATED WALLS, FLOORS, AND PARTITIONS. PROVIDE A DEVICE OR SYSTEM WHICH HAS BEEN TESTED AND LISTED AS COMPLYING WITH ASTM E814 AND INSTALL IN ACCORDANCE WITH THE CONDITIONS OF THE LISTING. PROVIDE A DEVICE OR SYSTEM WITH AN F-RATING EQUAL TO THE RATING OF THE ASSEMBLY BEING PENETRATED. REFER TO ARCHITECTURAL PLANS FOR WALL AND FLOOR TYPES.
14. PROVIDE PIPING LABELS FOR ALL PLUMBING PIPING. PIPING LABELS SHALL BE ACRYLIC FACED WRAP-AROUND TYPE. EACH LABEL SHALL INDICATE THE PIPING CONTENTS, DIRECTION OF FLOW, AND SHALL BEAR THE OWNER'S STANDARD COLOR FOR THE SERVICE INDICATED.
15. TEST PIPING SYSTEMS IN ACCORDANCE WITH SECTION 312 OF THE NORTH CAROLINA PLUMBING CODE.
16. THE CONTRACTOR SHALL EXPRESSLY AND COMPLETELY FOLLOW THE MANUFACTURER'S INSTRUCTIONS REQUIRED FOR VALIDATION OF THE MANUFACTURER'S WARRANTY, INCLUDING BUT NOT LIMITED TO SERVICE, MAINTENANCE, AND ADJUSTMENT OF THE EQUIPMENT.
17. THE CONTRACTOR SHALL GUARANTEE ALL WORK, MATERIALS, AND EQUIPMENT FURNISHED AGAINST DEFECTS, LEAKS, PERFORMANCE, AND NONOPERATION FOR A PERIOD OF ONE (1) YEAR AFTER THE DATE OF THE OWNER'S FINAL ACCEPTANCE, OR AS INDICATED IN THE GENERAL CONDITIONS. DEFECTS SHALL BE INTERPRETED AS DEFECTIVE MATERIALS OR EQUIPMENT OR UNSATISFACTORY INSTALLATION AND ARE NOT INTENDED TO APPLY TO ORDINARY WEAR AND TEAR. THE CONTRACTOR SHALL PAY FOR ANY REPAIRS OR REPLACEMENTS CAUSED BY THESE DEFECTS WITHIN THE PERIOD COVERED BY THE GUARANTEE, INCLUDING ALL INCIDENTAL WORK REQUIRED TO FIX THE DEFICIENCY.

# PLUMBING LEGEND

| EXISTING PIPING | NEW PIPING | ABBR. | DESCRIPTION |
|---|---|---|---|
| | | CW | COLD WATER PIPING |
| | | | ELBOW DOWN |
| | | | TEE BOTTOM CONNECTION |
| | | | ELBOW UP |
| | | | PIPE CONTINUES |
| | | | PIPE CAP |
| | | | BALL VALVE |
| | | | CONNECT TO EXISTING |
| | | | POINT OF DISCONNECTION |

ADDITIONAL ABBREVIATIONS

| | | | |
|---|---|---|---|
| ABOVE FINISH CEILING | AFC | KILOWATT | KW |
| ABOVE FINISH FLOOR | AFF | MAXIMUM | MAX |
| ABOVE FINISH GRADE | AFG | MINIMUM | MIN |
| BELOW FINISH CEILING | BFC | NOT IN CONTRACT | NIC |
| BELOW FINISH FLOOR | BFF | NOT TO SCALE | NTS |
| BELOW FINISH GRADE | BFG | POUNDS PER SQUARE INCH | PSI |
| BRITISH THERMAL UNIT PER HOUR | BTU/H | TEMPERATURE AND PRESSURE | T&P |
| CUBIC FEET PER HOUR | CFH | THERMOSTATIC MIXING VALVE | TMV |
| DRAINAGE FIXTURE UNIT | DFU | TYPICAL | TYP |
| DOWN | DN | VENT TERMINAL THROUGH ROOF | VTR |
| FOOT OR FEET | ' | WATER SUPPLY FIXTURE UNITS | WSFU |
| GALLONS PER CYCLE | GPC | | |
| GALLONS PER FLUSH | GPF | ELECTRICAL CONTRACTOR | EC |
| GALLONS PER HOUR | GPH | FIRE ALARM CONTRACTOR | FC |
| GALLONS PER MINUTE | GPM | GENERAL CONTRACTOR | GC |
| HORSEPOWER | HP | MECHANICAL CONTRACTOR | MC |
| INVERT ELEVATION | IE | PLUMBING CONTRACTOR | PC |
| INCH OR INCHES | " | SPRINKLER CONTRACTOR | SC |

# PLUMBING DRAWING INDEX


| DRAWING NUMBER | DRAWING NAME |
|---|---|
| P0.01 | PLUMBING NOTES, LEGEND, SCHEDULES, AND DETAILS |
| P1.01 | DEMO AND NEW WORK PLANS – PLUMBING |


# GENERAL NOTES

ALL NOTES APPLY TO ALL DRAWINGS AND ALL TRADES. IT IS THE RESPONSIBILITY OF ALL CONTRACTORS AND TRADES TO COORDINATE THE INSTALLATION OF THEIR WORK WITH THE INSTALLATION OF WORK BY ALL OTHER CONTRACTORS AND TRADES. THE REQUIREMENTS OF THE DRAWINGS, GENERAL REQUIREMENTS AND ALL ITEMS OF THE CONTRACT DOCUMENTS ARE EQUALLY BINDING ON ALL CONTRACTORS AND TRADES. EACH CONTRACTOR IS REQUIRED TO MAINTAIN FULL SETS OF THE CONTRACT DOCUMENTS FOR HIS EMPLOYEES USE ON THE PROJECT TO ASSURE THAT ALL WORK IS PROPERLY COORDINATED AND INSTALLED WITH THE WORK OF OTHER CONTRACTORS AND TRADES.

WHENEVER THERE ARE DISCREPANCIES BETWEEN DRAWINGS, OR BETWEEN THE DRAWINGS AND SPECIFICATIONS, OR CONFLICTS WITHIN THE SPECIFICATIONS AND/OR DRAWINGS, AND SUCH DISCREPANCY IS NOT CALLED TO THE ARCHITECT'S ATTENTION IN TIME TO PERMIT CLARIFICATION BY ADDENDUM, THE CONTRACTOR SHALL BASE HIS BID UPON PROVIDING THE BETTER QUALITY OR GREATER OF WORK OR MATERIAL CALLED FOR, SHALL SUBMIT A WRITTEN STATEMENT WITH HIS PROPOSAL NOTING SUCH DISCREPANCIES, AND SHALL SO FURNISH AND INSTALL SUCH BETTER QUALITY OR GREATER QUANTITY UNLESS OTHERWISE ORDERED IN WRITING.

Project No.
1667

Date:
11/12/2020
Drawn by:
JWA
Checked by:
CCC
Revisions


© STEWART-COOPER-NEWELL ARCHITECTS, P.A.

THIS DRAWING IS THE PROPERTY OF STEWART-COOPER-NEWELL ARCHITECTS, P.A. UNDER THE PROTECTION OF COPYRIGHT LAWS. THIS DRAWING MAY NOT BE REPRODUCED, PUBLISHED OR USED IN ANY WAY WITHOUT THE WRITTEN PERMISSION OF STEWART-COOPER-NEWELL ARCHITECTS, P.A.



optima engineering
150 Fayetteville St., Suite 520, Raleigh, NC 27601
1507 South Tryon St., Suite 300, Charlotte NC 28203
Phone: 919-626-2200 • www.optimaengineering.com
North Carolina License Number C-0814

Stewart·Cooper·Newell Architects
719 East Second Avenue
Gastonia, NC 28054
Phone: 704.865.6311
Fax: 704.865.0046
1.800.671.0621
www.scn-architects.com


NORTH CAROLINA PROFESSIONAL ENGINEER SEAL 039771 CHRISTOPHER CARL COOK

BAY EXPANSION FOR
GREENVILLE FIRE RESCUE #1
GREENVILLE, NC

PLUMBING NOTES, LEGEND, SCHEDULES AND DETAILS

Sheet No.
P0.01


THIS DRAWING IS AN INSTRUMENT OF SERVICE, THE DRAWING AND THE INFORMATION THEREON IS THE PROPERTY OF OPTIMA ENGINEERING, P.A. ANY REPRODUCTION, ALTERATION, OR USE FOR OTHER THAN THE INTENDED PROJECT, WITHOUT THE WRITTEN CONSENT OF OPTIMA ENGINEERING, P.A. IS EXPRESSLY FORBIDDEN. COPYRIGHT © OPTIMA ENGINEERING P.A. 2020, ALL RIGHTS RESERVED.

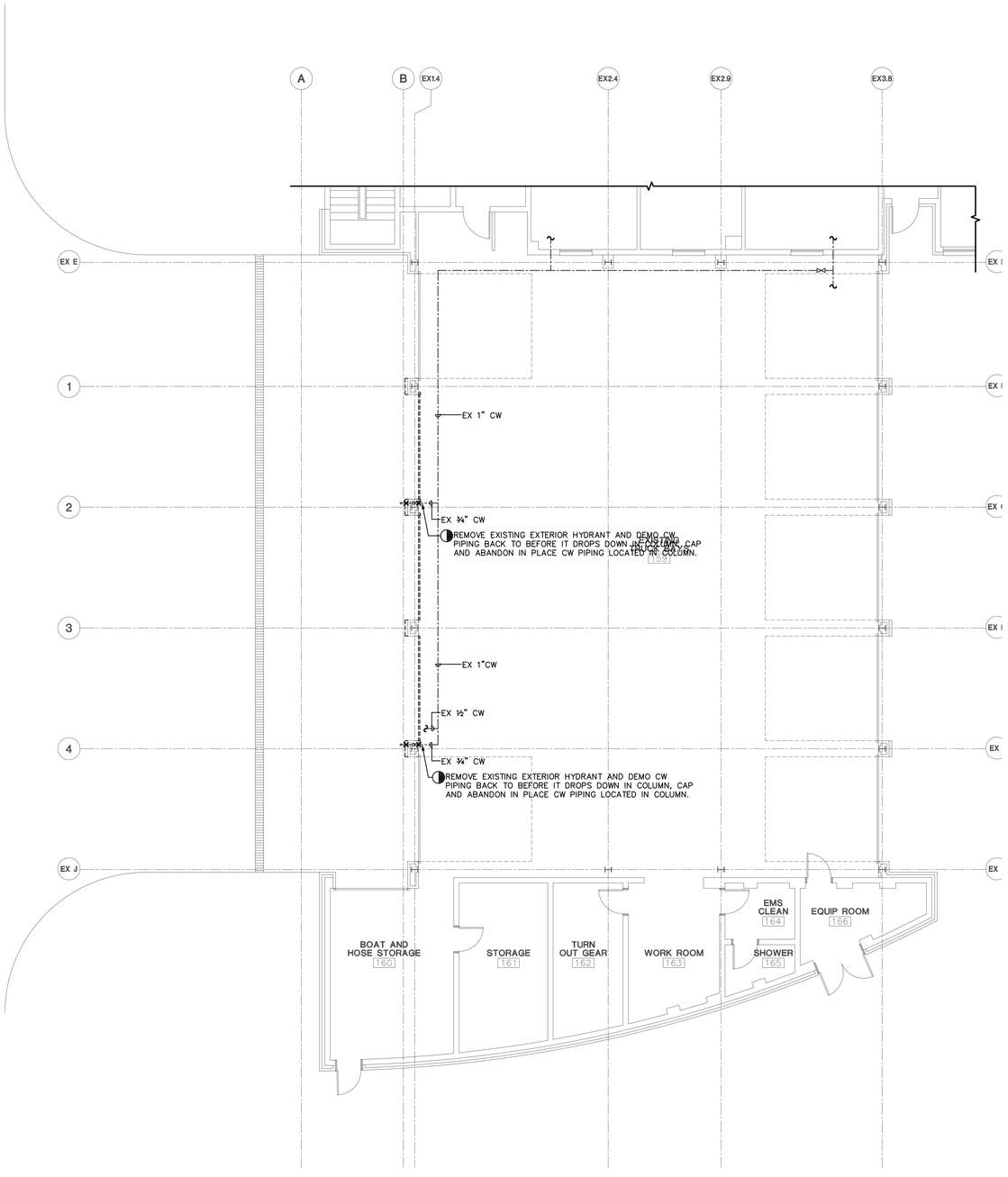


1 DEMOLITION PLAN - PLUMBING

1/8" = 1'-0"

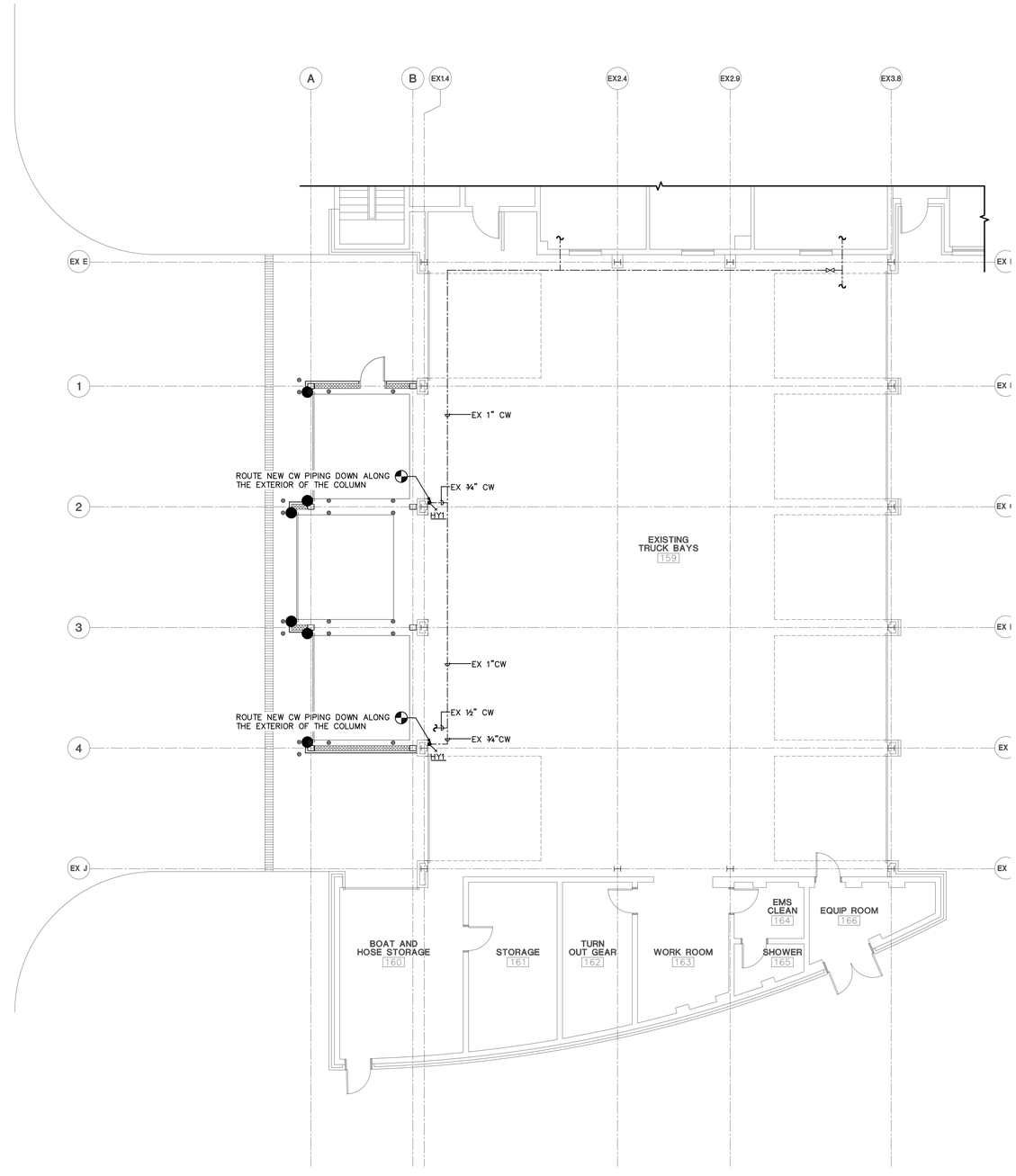


2 NEW WORK PLAN - PLUMBING

1/8" = 1'-0"

## GENERAL NOTES

ALL NOTES APPLY TO ALL DRAWINGS AND ALL TRADES. IT IS THE RESPONSIBILITY OF ALL CONTRACTORS AND TRADES TO COORDINATE THE INSTALLATION OF THEIR WORK WITH THE INSTALLATION OF WORK BY ALL OTHER CONTRACTORS AND TRADES. THE REQUIREMENTS OF THE DRAWINGS, GENERAL REQUIREMENTS AND ALL ITEMS OF THE CONTRACT DOCUMENTS ARE EQUALLY BINDING ON ALL CONTRACTORS AND TRADES. EACH CONTRACTOR IS REQUIRED TO MAINTAIN FULL SETS OF THE CONTRACT DOCUMENTS FOR HIS EMPLOYEES USE ON THE PROJECT TO ASSURE THAT ALL WORK IS PROPERLY COORDINATED AND INSTALLED WITH THE WORK OF OTHER CONTRACTORS AND TRADES.

WHENEVER THERE ARE DISCREPANCIES BETWEEN DRAWINGS, OR BETWEEN THE DRAWINGS AND SPECIFICATIONS, OR CONFLICTS WITHIN THE SPECIFICATIONS AND/OR DRAWINGS, AND SUCH DISCREPANCY IS NOT CALLED TO THE ARCHITECT'S ATTENTION IN TIME TO PERMIT CLARIFICATION BY ADDENDUM, THE CONTRACTOR SHALL BASE HIS BID UPON PROVIDING THE BETTER QUALITY OR GREATER OF WORK OR MATERIAL CALLED FOR, SHALL SUBMIT A WRITTEN STATEMENT WITH HIS PROPOSAL NOTING SUCH DISCREPANCIES, AND SHALL SO FURNISH AND INSTALL SUCH BETTER QUALITY OR GREATER QUANTITY UNLESS OTHERWISE ORDERED IN WRITING.

**Project No.**
**1667**

**Date:**
**11/12/2020**
**Drawn by:**
**JWA**
**Checked by:**
**CCC**
**Revisions**

© STEWART-COOPER-NEWELL ARCHITECTS, P.A.

THIS DRAWING IS THE PROPERTY OF STEWART-COOPER-NEWELL ARCHITECTS, P.A. AND MAY BE PROTECTED BY COPYRIGHT LAWS. THIS DRAWING MAY NOT BE REPRODUCED, PUBLISHED OR USED IN ANY WAY WITHOUT THE WRITTEN PERMISSION OF STEWART-COOPER-NEWELL ARCHITECTS, P.A.

optima engineering
150 Fayetteville St., Suite 520, Raleigh, NC 27601
1927 South Tryon St., Suite 300, Charlotte NC 28203
Phone: 919-856-2290 • www.optimaengineering.com
North Carolina License Number C-0814

Stewart·Cooper·Newell Architects
719 East Second Avenue
Gastonia, NC 28054
Phone: 704.865.6311
Fax: 704.865.0046
www.scn-architects.com
1.800.671.0621

NORTH CAROLINA PROFESSIONAL ENGINEER SEAL 039771 CHRISTOPHER CAMERON COOK

11/12/20

**BAY EXPANSION FOR**
**GREENVILLE FIRE RESCUE #1**
**GREENVILLE, NC**

**DEMO AND NEW WORK PLANS - PLUMBING**

**Sheet No.**
**P1.01**

THIS DRAWING IS AN INSTRUMENT OF SERVICE, THE DRAWING AND THE INFORMATION THEREON IS THE PROPERTY OF OPTIMA ENGINEERING, P.A. ANY REPRODUCTION, ALTERATION, OR USE FOR OTHER THAN THE INTENDED PROJECT, WITHOUT THE WRITTEN CONSENT OF OPTIMA ENGINEERING, P.A. IS EXPRESSLY FORBIDDEN. COPYRIGHT © OPTIMA ENGINEERING P.A. 2020, ALL RIGHTS RESERVED.

# FIRE PROTECTION DESIGN CRITERIA

| SYMBOL | OCCUPANCY | TYPE | DESIGN DENSITY (GPM/SF) | HYDRAULIC REMOTE AREA (SF) | MAX. COVERAGE PER SPRINKLER HEAD (SF) | HOSE STREAM | | AREAS OF COVERAGE |
|---|---|---|---|---|---|---|---|---|
| | | | | | | INSIDE (GPM) | OUTSIDE (GPM) | |
| OH-2 | ORDINARY HAZARD GROUP 2 | WET | 0.20 | 1500 | 130 | 100 | 150 | APPARATUS BAY |

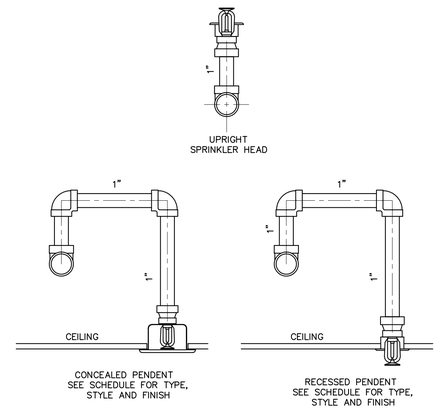


1 TYPICAL RETURN BEND SCHEMATIC
NO SCALE

# FIRE PROTECTION NOTES

GENERAL REQUIREMENTS:

1. THE EXISTING BUILDING IS PROTECTED THROUGHOUT BY AN AUTOMATIC, HYDRAULICALLY DESIGNED SPRINKLER SYSTEM. PROVIDE DESIGN, MATERIALS AND LABOR NEEDED TO MODIFY THE EXISTING SYSTEM TO CONFORM TO THE NEW SPACE LAYOUT. DELIVER A MODIFIED SYSTEM THAT MEETS THE INSTALLATION REQUIREMENTS OF THE LATEST EDITION OF NFPA 13.
2. ONLY AREAS NOTED WILL REQUIRE MODIFICATIONS/CHANGES TO THE LOCATION OF EXISTING SPRINKLERS.
3. IF NEW SPRINKLERS MUST BE ADDED, PROVIDE SPRINKLERS OF THE SAME CHARACTERISTICS (TYPE, ORIFICE SIZE, K FACTOR, FINISH, ETC.) AS THE EXISTING SPRINKLERS.
4. SPRINKLER CONTRACTOR SHALL SECURE A COMPLETE SET OF CONSTRUCTION DOCUMENTS (DRAWINGS AND SPECIFICATIONS) AND COORDINATE THE LOCATION OF EXISTING AND NEW SPRINKLERS WITH THE WORK OF OTHER TRADES. RELOCATE AND ADD SPRINKLERS AS NEEDED TO PROVIDE ADEQUATE COVERAGE UNDER THE INSTALLATION REQUIREMENTS OF THE LATEST EDITION OF NFPA 13.
5. THE INTENT OF THESE PLANS IS TO PROVIDE INFORMATION TO THE REVIEWING AUTHORITIES THAT THE BUILDING WILL BE PROTECTED BY A SPRINKLER SYSTEM FOR PERMIT APPROVAL. SPRINKLER LAYOUT INCLUDED WITH THIS SET OF PLANS IS PROVIDED FOR COORDINATION WITH RESPECT TO LIGHTS, CEILING GRID, MECHANICAL DIFFUSERS, ETC.
6. WHERE 20 OR MORE SPRINKLERS HAVE BEEN ADDED, PROVIDE HYDRAULIC CALCULATIONS TO DEMONSTRATE THE PRESSURE AND FLOW REQUIREMENTS ARE SATISFIED AND IN COMPLIANCE WITH NFPA 13. CALCULATION FORMAT SHALL SHALL MEET ALL THE REQUIREMENTS OF NFPA 13.
7. IN ALL CASES, EVEN IF CALCULATIONS ARE NOT REQUIRED, PROVIDE A COMPLETE SET OF SHOP DRAWINGS, USING THE FLOOR PLANS OBTAINED FROM THE ARCHITECT, SHOWING THE COMPLETE SPRINKLER SYSTEM LAYOUT. INDICATE ON THE PLANS THE HAZARD ASSUMED FOR THE SPACE(S) AND CLEARLY INDICATE THE TYPE OF SPRINKLER PROVIDED IN EACH AREA.

# SEISMIC RESTRAINT NOTES

1. PROVIDE DESIGN AND INSTALLATION OF SEISMIC RESTRAINT ELEMENTS FOR THE FIRE SUPPRESSION SYSTEM(S) IN COMPLIANCE WITH ALL APPLICABLE REQUIREMENTS OF THE 2018 NORTH CAROLINA BUILDING CODE, NFPA 13 AND ASCE 7-10, CHAPTER 13. REFER TO THE APPENDIX B ON THE ARCHITECTURAL DRAWINGS FOR THE SITE'S SEISMIC DESIGN CATEGORY.
2. REFER TO NFPA 13 CHAPTER 9.3 "PROTECTION OF PIPING AGAINST DAMAGE WHERE SUBJECT TO EARTHQUAKES" TO DETERMINE THE CORRECT RESTRAINTS FOR PIPING.
3. REQUIRED RESTRAINT DEVICES AND MATERIALS SHALL BE AN INTEGRAL PART OF THE DESIGN AND INCLUDED IN THE SPRINKLER SYSTEM SHOP DRAWINGS. PROVIDE BRACING, ISOLATORS, SEISMIC MOUNTS, RESTRAINTS, ETC. AS NECESSARY TO COMPLY WITH ALL APPLICABLE REQUIREMENTS. PROVIDE SUPPORTING CALCULATIONS AND BRACING DETAILS AS APPLICABLE.
4. THE CONTRACTOR SHALL BE RESPONSIBLE FOR ANY REQUIRED SPECIAL INSPECTIONS AND ASSOCIATED DOCUMENTATION. THE CONTRACTOR SHALL PROVIDE VERIFICATION IN WRITING OF COMPLIANCE WITH THE APPROVED SHOP DRAWINGS.
5. REVIEW AND APPROVAL OF THE SHOP DRAWINGS BY THE ARCHITECT/ENGINEER/ SHALL NOT RELIEVE THE CONTRACTOR OF HIS RESPONSIBILITY TO COMPLY WITH ALL APPLICABLE REQUIREMENTS OF THE 2018 NORTH CAROLINA BUILDING CODE, NFPA 13 AND ASCE 7-10.
6. ALTERNATIVE METHODS OF PROVIDING EARTHQUAKE PROTECTION OF SPRINKLER SYSTEMS BASED ON A SEISMIC ANALYSIS CERTIFIED BY A REGISTERED PROFESSIONAL ENGINEER SUCH THAT SYSTEM PERFORMANCE WILL BE AT LEAST EQUAL TO THAT OF THE BUILDING STRUCTURE UNDER EXPECTED SEISMIC FORCES SHALL BE PERMITTED (NFPA 13 SECTION 9.3.1.2).

# FIRE PROTECTION DRAWING INDEX


| DRAWING NUMBER | DRAWING NAME |
|---|---|
| F0.01 | FIRE PROTECTION SPECIFICATIONS, DESIGN DATA, AND DETAILS |
| F1.01 | NEW WORK PLANS – FIRE PROTECTION |


# GENERAL NOTES

ALL NOTES APPLY TO ALL DRAWINGS AND ALL TRADES. IT IS THE RESPONSIBILITY OF ALL CONTRACTORS AND TRADES TO COORDINATE THE INSTALLATION OF THEIR WORK WITH THE INSTALLATION OF WORK BY ALL OTHER CONTRACTORS AND TRADES. THE REQUIREMENTS OF THE DRAWINGS, GENERAL REQUIREMENTS AND ALL ITEMS OF THE CONTRACT DOCUMENTS ARE EQUALLY BINDING ON ALL CONTRACTORS AND TRADES. EACH CONTRACTOR IS REQUIRED TO MAINTAIN FULL SETS OF THE CONTRACT DOCUMENTS FOR HIS EMPLOYEES USE ON THE PROJECT TO ASSURE THAT ALL WORK IS PROPERLY COORDINATED AND INSTALLED WITH THE WORK OF OTHER CONTRACTORS AND TRADES.

WHENEVER THERE ARE DISCREPANCIES BETWEEN DRAWINGS, OR BETWEEN THE DRAWINGS AND SPECIFICATIONS, OR CONFLICTS WITHIN THE SPECIFICATIONS AND/OR DRAWINGS, AND SUCH DISCREPANCY IS NOT CALLED TO THE ARCHITECT'S ATTENTION IN TIME TO PERMIT CLARIFICATION BY ADDENDUM, THE CONTRACTOR SHALL BASE HIS BID UPON PROVIDING THE BETTER QUALITY OR GREATER OF WORK OR MATERIAL CALLED FOR, SHALL SUBMIT A WRITTEN STATEMENT WITH HIS PROPOSAL NOTING SUCH DISCREPANCIES, AND SHALL SO FURNISH AND INSTALL SUCH BETTER QUALITY OR GREATER QUANTITY UNLESS OTHERWISE ORDERED IN WRITING.

Project No.
1667

Date:
11/12/2020
Drawn by:
JWA
Checked by:
CCC
Revisions


© STEWART-COOPER-NEWELL ARCHITECTS, P.A.

THIS DRAWING IS THE PROPERTY OF STEWART-COOPER-NEWELL ARCHITECTS, P.A. UNDER THE PROTECTION OF COPYRIGHT LAWS. THIS DRAWING MAY NOT BE REPRODUCED, PUBLISHED OR USED IN ANY WAY WITHOUT THE WRITTEN PERMISSION OF STEWART-COOPER-NEWELL ARCHITECTS, P.A.



optima engineering
150 Fayetteville St, Suite 520, Raleigh, NC 27601
1507 South Tryon St, Suite 300, Charlotte NC 28203
Phone: 919-926-2230 • www.optimaengineering.com
North Carolina License Number C-0814

Stewart·Cooper·Newell Architects
719 East Second Avenue
Gastonia, NC 28054
Phone: 704.865.6311
Fax: 704.865.0046
1.800.671.0621
www.scn-architects.com


NORTH CAROLINA PROFESSIONAL ENGINEER SEAL 039771 CHRISTOPHER CAMERON COOK

11/12/20

BAY EXPANSION FOR
GREENVILLE FIRE RESCUE #1
GREENVILLE, NC

FIRE PROTECTION SPECIFICATIONS, DESIGN DATA, AND DETAILS

Sheet No.
F0.01


THIS DRAWING IS AN INSTRUMENT OF SERVICE, THE DRAWING AND THE INFORMATION THEREON IS THE PROPERTY OF OPTIMA ENGINEERING, P.A. ANY REPRODUCTION, ALTERATION, OR USE FOR OTHER THAN THE INTENDED PROJECT, WITHOUT THE WRITTEN CONSENT OF OPTIMA ENGINEERING, P.A. IS EXPRESSLY FORBIDDEN. COPYRIGHT © OPTIMA ENGINEERING P.A. 2020, ALL RIGHTS RESERVED.

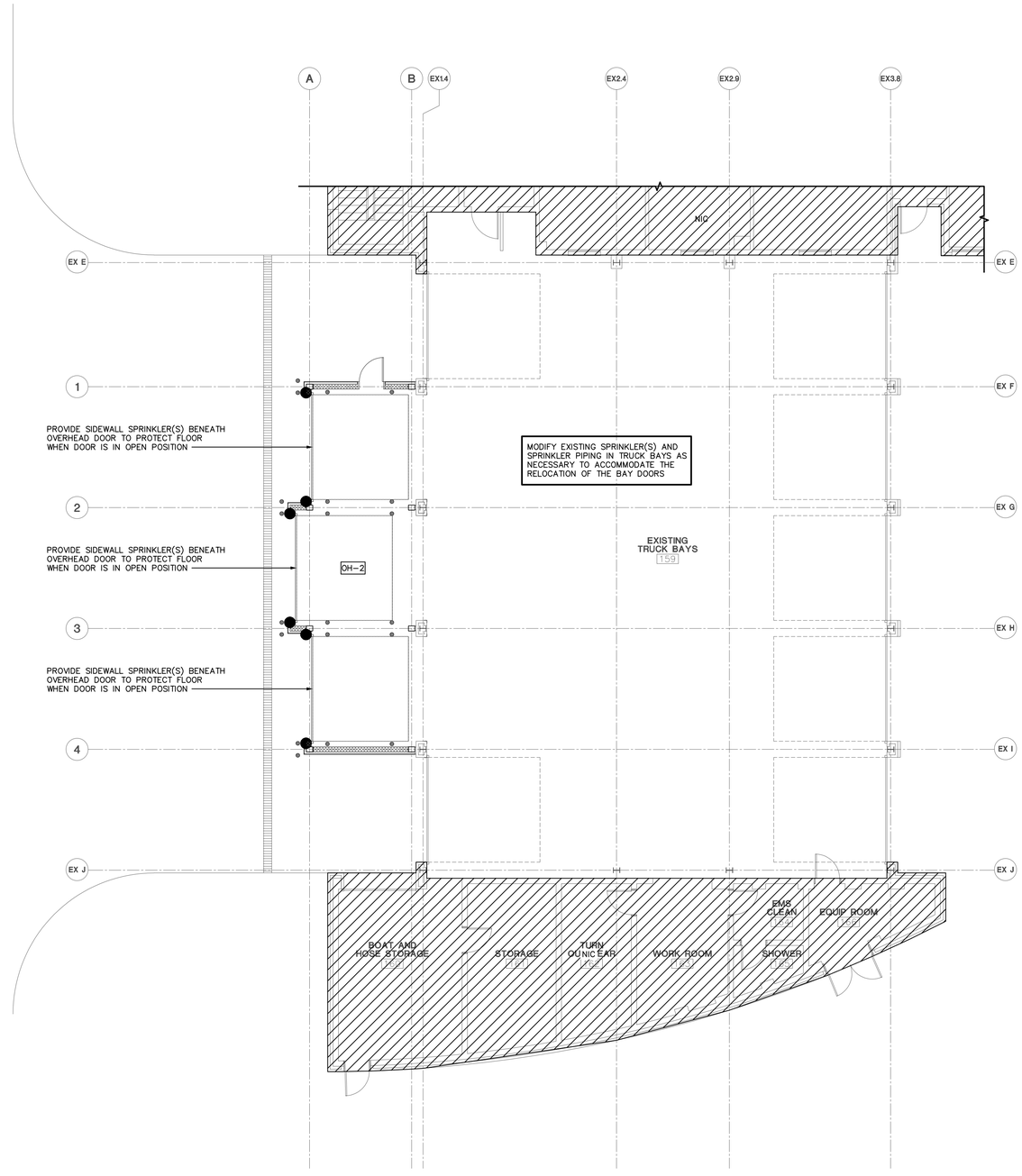


## 1 NEW WORK PLAN - FIRE PROTECTION

1/8" = 1'-0"

## GENERAL NOTES

ALL NOTES APPLY TO ALL DRAWINGS AND ALL TRADES. IT IS THE RESPONSIBILITY OF ALL CONTRACTORS AND TRADES TO COORDINATE THE INSTALLATION OF THEIR WORK WITH THE INSTALLATION OF WORK BY ALL OTHER CONTRACTORS AND TRADES. THE REQUIREMENTS OF THE DRAWINGS, GENERAL REQUIREMENTS AND ALL ITEMS OF THE CONTRACT DOCUMENTS ARE EQUALLY BINDING ON ALL CONTRACTORS AND TRADES. EACH CONTRACTOR IS REQUIRED TO MAINTAIN FULL SETS OF THE CONTRACT DOCUMENTS FOR HIS EMPLOYEES USE ON THE PROJECT TO ASSURE THAT ALL WORK IS PROPERLY COORDINATED AND INSTALLED WITH THE WORK OF OTHER CONTRACTORS AND TRADES.

WHENEVER THERE ARE DISCREPANCIES BETWEEN DRAWINGS, OR BETWEEN THE DRAWINGS AND SPECIFICATIONS, OR CONFLICTS WITHIN THE SPECIFICATIONS AND/OR DRAWINGS, AND SUCH DISCREPANCY IS NOT CALLED TO THE ARCHITECT'S ATTENTION IN TIME TO PERMIT CLARIFICATION BY ADDENDUM, THE CONTRACTOR SHALL BASE HIS BID UPON PROVIDING THE BETTER QUALITY OR GREATER OF WORK OR MATERIAL CALLED FOR, SHALL SUBMIT A WRITTEN STATEMENT WITH HIS PROPOSAL NOTING SUCH DISCREPANCIES, AND SHALL SO FURNISH AND INSTALL SUCH BETTER QUALITY OR GREATER QUANTITY UNLESS OTHERWISE ORDERED IN WRITING.

**Project No.**
**1667**

**Date:**
**11/12/2020**
**Drawn by:**
**JWA**
**Checked by:**
**CCC**
**Revisions**

© STEWART-COOPER-NEWELL ARCHITECTS, P.A.

THIS DRAWING IS THE PROPERTY OF STEWART-COOPER-NEWELL ARCHITECTS, P.A. UNDER THE PROTECTION OF COPYRIGHT LAWS. THIS DRAWING MAY NOT BE REPRODUCED, PUBLISHED OR USED IN ANY WAY WITHOUT THE WRITTEN PERMISSION OF STEWART-COOPER-NEWELL ARCHITECTS, P.A.

optima engineering
150 Fayetteville St, Suite 520, Raleigh, NC 27601
1507 South Tryon St., Suite 300, Charlotte NC 28203
Phone: 919-926-2250 ★ www.optimaengineering.com
North Carolina License Number C-0814

Stewart·Cooper·Newell Architects
719 East Second Avenue
Gastonia, NC 28054
Phone: 704.865.6311
Fax: 704.865.0046
www.scn-architects.com
1.800.671.0621

NORTH CAROLINA PROFESSIONAL ENGINEER SEAL 039771 CHRISTOPHER CAMPBELL COOK

11/12/20

**BAY EXPANSION FOR**
**GREENVILLE FIRE RESCUE #1**
**GREENVILLE, NC**

**NEW WORK PLAN - FIRE PROTECTION**

**Sheet No.**
**F1.01**

THIS DRAWING IS AN INSTRUMENT OF SERVICE, THE DRAWING AND THE INFORMATION THEREON IS THE PROPERTY OF OPTIMA ENGINEERING, P.A. ANY REPRODUCTION, ALTERATION, OR USE FOR OTHER THAN THE INTENDED PROJECT, WITHOUT THE WRITTEN CONSENT OF OPTIMA ENGINEERING, P.A. IS EXPRESSLY FORBIDDEN. COPYRIGHT © OPTIMA ENGINEERING P.A. 2020, ALL RIGHTS RESERVED.

# 2018 NORTH CAROLINA ENERGY CONSERVATION CODE

**COMMERCIAL ENERGY EFFICIENCY – MECHANICAL SUMMARY**

**C401 METHOD OF COMPLIANCE**

- ■ 2018 NCECC CHAPTER 4
- ☐ ASHRAE 90.1–2013 PRESCRIPTIVE
- ☐ ASHRAE 90.1–2013 PERFORMANCE
- ☐ N/A (EXISTING LIGHTING, HVAC, AND DOM. WATER HEATING SYSTEMS TO REMAIN)
- ☐ COMCHECK PROVIDED (2018 NCECC)
- ☐ COMCHECK PROVIDED (90.1–2013)
- ☐ ENERGY MODELING DATA PROVIDED

**C406 ADDITIONAL EFFICIENCY PACKAGE OPTIONS**

- ☐ C406.2 EFFICIENT MECH EQUIPMENT
- ■ C406.3 REDUCED LTG DENSITY
- ☐ C406.4 ENHANCED LTG CONTROLS
- ☐ C406.5 ON–SITE RENEWABLE ENERGY
- ☐ C406.6 DEDICATED OA SYSTEM
- ☐ C406.7 SERVICE WATER HEATING

**C301 CLIMATE ZONE**

3A – PITT COUNTY, NORTH CAROLINA

**DESIGN CONDITIONS**

EXTERIOR (ASHRAE 90.1–2013 TABLE D–1)

| | |
|---|---|
| winter dry bulb | 25° F. |
| summer dry bulb | 93° F. |
| summer wet bulb | 75° F. |

INTERIOR (2018 NCECC SECTION C302.1)

| | |
|---|---|
| winter dry bulb | 72° F. |
| summer dry bulb | 75° F. |

**C403.2 HEATING & COOLING LOADS AND EQUIPMENT & SYSTEM SIZING**

| | |
|---|---|
| BUILDING HEATING LOAD | 264,600 BTUH (peak) |
| BUILDING COOLING LOAD | EXISTING TO REMAIN |
| INSTALLED HEATING CAPACITY | 330,773 BTUH |
| INSTALLED COOLING CAPACITY | EXISTING TO REMAIN |

**C403.2.3 & C406.2 – REQUIRED & INCREASED HVAC EQUIPMENT PERFORMANCE**

SYSTEM DESCRIPTION – EXISTING BOILER AND HOT WATER UNIT HEATERS

**C403.2.4 THRU C403.2.11**

■ HVAC SYSTEMS ARE FULLY COMPLIANT WITH THE REQUIREMENTS FOR HVAC SYSTEM CONTROL, VENTILATION, ENERGY RECOVERY, DUCT AND PLENUM INSULATION AND SEALING, PIPING INSULATION, AND SYSTEM COMPLETION.

**C403.2.12 – AIR SYSTEM DESIGN AND CONTROL**

■ ALL FANS INSTALLED ON THE PROJECT ARE 5 HP OR LESS AND ARE EXEMPT FROM THESE REQUIREMENTS.

☐ FANS ABOVE 5 HP MEET THE CFM LIMITATIONS SHOWN BELOW:

**C408 – SYSTEM COMMISSIONING**

■ PROJECT IS LESS THAN 10,000 SQUARE FEET AND IS EXEMPT FROM THE SYSTEM COMMISSIONING REQUIREMENTS OF SECTION C408.

☐ PROJECT IS GREATER THAN 10,000 SQUARE FEET AND REQUIRES SYSTEM COMMISSIONING PER SECTION C408.

## MECHANICAL GENERAL NOTES

1. DO NOT SCALE DRAWINGS. SEE ARCHITECTURAL DRAWINGS AND REFLECTED CEILING PLANS FOR EXACT LOCATION OF DOORS, WINDOWS, CEILING DIFFUSERS, ETC.
2. ALL COST ASSOCIATED WITH SUBSTITUTED EQUIPMENT TO COMPLY WITH BASIS OF DESIGN, INCLUDING PROVIDING MAINTENANCE ACCESS, CLEARANCE, PIPING, SHEET METAL, ELECTRICAL, REPLACEMENT OF OTHER SYSTEM COMPONENTS, BUILDING ALTERATIONS, ETC., SHALL BE INCLUDED IN THE ORIGINAL BASE BID. NO ADDITIONAL COST ASSOCIATED WITH SUBSTITUTED EQUIPMENT WILL BE APPROVED DURING CONSTRUCTION AND ALL COST WILL BE THE RESPONSIBILITY OF THE MECHANICAL CONTRACTOR. THIS INCLUDES ANY MODIFICATIONS TO ANY ASSOCIATED MECHANICAL, PLUMBING, OR ELECTRICAL SYSTEMS REQUIRED BY THIS SPECIFIC MANUFACTURER'S INSTALLATION INSTRUCTIONS.
3. ALL DUCTWORK SHALL BE GALVANIZED SHEET METAL CONSTRUCTED IN ACCORDANCE WITH THE LATEST SMACNA STANDARDS. ALL SUPPLY, RETURN AND OUTSIDE AIR DUCTWORK SHALL BE WRAPPED WITH 2" THICK DUCT WRAP WITH VAPOR BARRIER. INSULATION (INCLUDING FLEXIBLE DUCT INSULATION) SHALL HAVE A MINIMUM INSTALLED R–VALUE OF 6.0. DUCT DIMENSIONS ON PLANS ARE FREE AREA SIZE.
4. SUPPLY AND RETURN DUCTWORK LOCATED OUTSIDE THE BUILDING SHALL BE WRAPPED WITH 3" THICK DUCT WRAP WITH VAPOR BARRIER HAVING A MINIMUM INSTALLED R VALUE OF 8.0. COVER EXTERNAL INSULATION WITH AN ALUMINUM OUTER ENCLOSURE AND SEAL WATER TIGHT.
5. ALL DUCTWORK SHALL BE SEALED PER THE REQUIREMENTS OF THE NORTH CAROLINA MECHANICAL CODE. SEAL LOW PRESSURE SUPPLY, RETURN, OUTSIDE AIR, AND EXHAUST DUCTWORK FOR POSITIVE/NEGATIVE 2" PRESSURE CLASS, SMACNA SEAL CLASS A, SMACNA LEAKAGE CLASS 4.
6. ALL PIPING, DUCTS, VENTS, ETC., EXTENDING THROUGH WALLS AND ROOF SHALL BE FLASHED AND COUNTERFLASHED IN A WATERPROOF MANNER.
7. ALL PIPING AND DUCTWORK LOCATIONS SHALL BE COORDINATED WITH THE WORK UNDER OTHER DIVISIONS OF THE SPECIFICATIONS, TO AVOID INTERFERENCE.
8. UPON PROJECT COMPLETION, THE MECHANICAL CONTRACTOR IS RESPONSIBLE FOR PROVIDING THE OWNER INSTALLATION INFORMATION INCLUDING RECORD SUBMITTALS (WITH ANY SUBMITTAL REVIEW COMMENTS ADDRESSED) AND O&M MANUALS FOR EACH PIECE OF EQUIPMENT INCLUDING ALL SELECTED OPTIONS, THE NAME AND ADDRESS OF AT LEAST ONE SERVICE AGENCY, FULL CONTROL SYSTEM O&M AND CALIBRATION INFORMATION INCLUDING WIRING DIAGRAMS, SCHEMATICS, FULL SEQUENCE OF OPERATION, AND PROGRAMMED SETPOINTS.
9. PROVIDE A ONE YEAR WARRANTY FOR ALL WORK PERFORMED BEGINNING ON THE DAY THE SYSTEM IS COMPLETELY OPERATIONAL AND ACCEPTABLE BY THE OWNER.
10. PROVIDE MANUFACTURER'S RECOMMENDED CLEARANCES AROUND ALL EQUIPMENT FOR MAINTENANCE AND FILTER REMOVAL.
11. ANY DEVICE REQUIRING A THERMOSTAT FOR CONTROL SHALL BE FURNISHED WITH A THERMOSTAT WHETHER INDICATED ON THE DRAWINGS OR NOT.
12. INSTALL THE TOP OF ALL THERMOSTATS, SENSORS, AND SWITCHES AT 4'–0" (MAXIMUM) ABOVE FINISH FLOOR. COORDINATE EXACT THERMOSTAT LOCATION WITH OWNER PRIOR TO INSTALLATION. ANY DEVICE ON A PERIMETER WALL SHALL BE MOUNTED ON A FOAM–FILLED ELECTRICAL BOX, WITH ALL GAPS BETWEEN BOX AND WALL SEALED TO PREVENT INFILTRATION.
13. CONTRACTOR SHALL VERIFY LOCATION OF ALL ROOF PENETRATIONS WITH ARCHITECT & OWNER PRIOR TO INSTALLATION. NEW ROOF PENETRATIONS MADE THROUGH EXISTING ROOF SYSTEMS SHALL BE VERIFIED WITH THE OWNER'S EXISTING ROOF WARRANTY PRIOR TO INSTALLATION.
14. ROOF CURBS SHALL ALLOW A MINIMUM OF 8" ABOVE ROOF INSULATION FOR FLASHING, OR AS INDICATED ON THE DRAWINGS, WHICHEVER IS GREATER. IN ADDITION, ALL ROOF CURBS OR EQUIPMENT SUPPORT RAILS THAT SUPPORT EQUIPMENT, PIPING, CONDUIT, ETC. EXPOSED ON THE ROOF SHALL HAVE SUFFICIENT HEIGHT TO MAINTAIN A MINIMUM OF 18" CLEARANCE BELOW SUPPORTED EQUIPMENT FOR ROOF MAINTENANCE.
15. CONTRACTOR SHALL LOCATE EXHAUST FANS, OUTLETS, AND GAS FLUES A MINIMUM OF 10'–0" FROM ANY OUTSIDE AIR INTAKE.
16. ALL HOT WATER PIPING 2" AND LESS SHALL BE SCHEDULE 40 BLACK STEEL OR HARD–DRAWN TYPE–L COPPER PIPE AND FITTINGS.
17. HOT WATER PIPING (1½" AND SMALLER) SHALL BE INSULATED WITH 1½" THICK FIBERGLASS INSULATION. INSULATION SHALL HAVE A FACTORY APPLIED PRESSURIZED VAPOR BARRIER JACKET WITH PRESSURE SENSITIVE ADHESIVE SELF–SEALING LAP. ALL FITTINGS SHALL HAVE PVC FITTING COVERS. ALL PIPING OUTSIDE SHALL HAVE A BITUMINOUS COATING ALUMINUM JACKET AND PVC FITTING COVERS.
18. ALL HOT WATER PIPING SHALL PITCH DOWN IN DIRECTION OF FLOW WITH MANUAL AIR VENTS AT ALL HIGH POINTS AND ½" DRAIN VALVES AT ALL LOW POINTS.
19. PROVIDE UNIONS, FLANGES OR COUPLINGS AT CONNECTION TO ALL VALVES AND EQUIPMENT. DO NOT USE DIRECT WELDED OR THREADED CONNECTIONS TO VALVES, EQUIPMENT OR OTHER APPARATUS.
20. PROVIDE NON–CONDUCTING DIELECTRIC UNIONS WHENEVER CONNECTING DISSIMILAR METALS.
21. ALL ISOLATION VALVES, TERMINAL UNITS, CONTROLS, ETC. REQUIRING ACCESS AND SERVICE SHALL BE INSTALLED WITHIN 18" OF THE CEILING FOR SERVICE ACCESSIBILITY. LOCATIONS SHALL BE INDICATED ON THE CEILING GRID PER THE SPECIFICATIONS.
22. EQUIPMENT OPERATED DURING CONSTRUCTION SHALL USE FILTERED MEDIA TO PREVENT CONSTRUCTION DEBRIS FROM ENTERING COILS, DUCTWORK SYSTEMS, AIR TERMINALS ETC. AT COMPLETION OF CONSTRUCTION, MECHANICAL CONTRACTOR SHALL CLEAN ALL SYSTEMS WITH ALL CONTROL DEVICES WIDE OPEN AND REMOVE ANY REMAINING DEBRIS PRIOR TO TEST AND BALANCING. MECHANICAL CONTRACTOR SHALL REPLACE ALL FILTRATION WITH NEW FILTERS AT COMPLETION OF CONSTRUCTION. ANY DUCTWORK, AIR TERMINALS, AND/OR OTHER EQUIPMENT UPSTREAM OF FILTRATION SHALL BE CLEANED THOROUGHLY OF CONSTRUCTION DEBRIS BEFORE HANDING OVER TO OWNER.
23. THE MECHANICAL CONTRACTOR SHALL BE RESPONSIBLE FOR PROVIDING RESTRAINTS TO RESIST THE EARTHQUAKE EFFECTS ON THE MECHANICAL SYSTEMS. THE REQUIREMENTS FOR THOSE RESTRAINTS ARE FOUND IN THE LOCAL BUILDING CODE AND ASCE 7. THE ANCHORAGE OF THE MECHANICAL SYSTEMS SHALL COMPLY WITH THE REQUIREMENTS OF THE LOCAL BUILDING CODE AND ASCE 7.
24. MECHANICAL CONTRACTOR SHALL PROVIDE PRE–PRINTED COLOR–CODED PIPE LABELS WITH 1–1/2" HIGH LETTERING INDICATING SERVICE AND FLOW DIRECTION. ALL PIPING TO MATCH EXISTING FACILITIES STANDARD (IF APPLICABLE). OTHERWISE, PIPE LABELS SHALL MATCH THE FOLLOWING:
    HOT WATER PIPING: YELLOW BACKGROUND, BLACK LETTERING
25. ALL MECHANICAL EQUIPMENT SHALL BE U.L. LISTED AND LABELED AS A COMPLETE PACKAGE, NOT THROUGH INDIVIDUAL COMPONENTS OR PARTS. PROVIDE REQUIRED 3RD PARTY FIELD UL LISTING SERVICES AS REQUIRED TO COMPLY.

## MECHANICAL DEMOLITION NOTES

1. THE MECHANICAL CONTRACTOR SHALL VISIT SITE PRIOR TO BEGINNING WORK TO DETERMINE THE LEVEL OF DEMOLITION REQUIRED AND INCLUDE ALL NECESSARY PRICING IN THEIR BID.
2. IT IS THE MECHANICAL CONTRACTORS RESPONSIBILITY TO FIELD VERIFY ALL EXISTING DUCTWORK AND PIPING. ANY DISCREPANCIES BETWEEN EXISTING CONDITIONS AND MECHANICAL PLANS SHOULD BE BROUGHT TO THE ATTENTION OF THE MECHANICAL ENGINEER.
3. M.C. SHALL VERIFY ALL EXISTING PIPING SYSTEMS TO REMAIN ARE INSULATED WITH VAPOR BARRIER INTACT. IF ANY PORTION OF THE PIPING SYSTEM IS MISSING INSULATION OR DETERMINED DURING ANY PHASE OF THE PROJECT AS DEFECTIVE, THAT PORTION SHALL BE PROVIDED WITH NEW INSULATION. MINOR TEARS ON EXISTING PIPING MAY BE REPAIRED WITH TAPES, ADHESIVE, OR SEALANT. EXISTING PIPING SYSTEMS SHALL INCLUDE HOT WATER PIPING. THE MECHANICAL CONTRACTOR SHALL MAKE PROVISIONS IN THEIR BASE BID TO COVER ALL COSTS NECESSARY ACHIEVE A CONTINUOUS VAPOR BARRIER THROUGHOUT THESE EXISTING SYSTEMS.
4. FOR ALL EXISTING HVAC EQUIPMENT AND DUCTWORK NOTED TO REMAIN AND SERVING AREA OF RENOVATION, MECHANICAL CONTRACTOR SHALL INSPECT EQUIPMENT (AND ANY ASSOCIATED CONTROLS, VALVES, DAMPERS, ETC.) TO VERIFY PROPER WORKING ORDER. MECHANICAL CONTRACTOR TO SERVICE AND CLEAN EXISTING HVAC UNITS TO ENSURE DESIGN AIRFLOW AND COOLING/HEATING CAPACITIES ARE OBTAINED. ANY EQUIPMENT FOUND TO BE INOPERABLE OR SHORT OF DESIGN CAPACITIES SHALL BE BROUGHT TO THE ATTENTION OF THE ENGINEER PRIOR TO PROJECT COMPLETION. PROVIDE CLEAN FILTERS IN ALL UNITS AT COMPLETION OF PROJECT. DAMAGED DUCTWORK SHALL BE REPAIRED.

## MECHANICAL LEGEND

| SYMBOL | DESCRIPTION | ABBR. |
|---|---|---|
| HWS | HOT WATER SUPPLY | HWS |
| HWR | HOT WATER RETURN | HWR |
| | BUTTERFLY VALVE | |
| | 3–PIECE BALL VALVE | |
| | CHECK VALVE | |
| | STRAINER WITH BLOWDOWN VALVE WITH HOSE CONN. | |
| | BALANCING VALVE | |
| | B&G CIRCUIT SETTER | |
| | UNION | |
| | THERMOMETER | |
| | PRESSURE GAGE & COCK | |
| | GAGE COCK | |
| | FLOW SWITCH | |
| | ECCENTRIC REDUCER | |
| | CONCENTRIC REDUCER | |
| | CONTROL VALVE | |
| | GAS COCK | |
| | PRESSURE REDUCING/REGULATING VALVE | |
| | SOLENOID VALVE | |
| S | SWITCH (4'–0" AFF TO TOP) | |
| T | NEW THERMOSTAT (4'–0" AFF TO TOP) | |
| T | EXISTING THERMOSTAT | |
| | DOUBLE LINE DUCTWORK | |
| | SINGLE LINE DUCTWORK | |
| | EXISTING DOUBLE LINE DUCTWORK | |
| | EXISTING SINGLE LINE DUCTWORK | |
| | EXISTING DUCTWORK TO BE REMOVED | |
| 20/14ø | 20"x14" FLAT OVAL DUCT | |
| 20x14 | 20"x14" RECTANGULAR DUCT | |
| 8"ø | 8" DIAMETER ROUND DUCT | |
| M | MOTORIZED DAMPER | |
| C | CARBON MONOXIDE SENSOR | |
| | POINT OF EXISTING TO NEW CONNECTION | |
| M.C. | MECHANICAL CONTRACTOR | |
| E.C. | ELECTRICAL CONTRACTOR | |
| P.C. | PLUMBING CONTRACTOR | |
| N.I.C. | NOT IN CONTRACT | |
| EX | EXISTING | |
| AFF | ABOVE FINISHED FLOOR | |
| DN | DOWN | |
| UP | UP | |
| | SECTION CUT | |
| X | REFERRING DETAIL NUMBER | |
| X | REFERRING SHEET NUMBER | |

## MECHANICAL DRAWING INDEX



| DRAWING NUMBER | DRAWING NAME |
|---|---|
| M0.01 | MECHANICAL NOTES, LEGEND, AND SPECIFICATIONS |
| M0.02 | MECHANICAL SCHEDULES AND DETAILS |
| M1.01 | NEW WORK DUCTWORK PLAN – MECHANICAL |
| M2.01 | NEW WORK PIPING PLAN – MECHANICAL |



## GENERAL NOTES

ALL NOTES APPLY TO ALL DRAWINGS AND ALL TRADES. IT IS THE RESPONSIBILITY OF ALL CONTRACTORS AND TRADES TO COORDINATE THE INSTALLATION OF THEIR WORK WITH THE INSTALLATION OF WORK BY ALL OTHER CONTRACTORS AND TRADES. THE REQUIREMENTS OF THE DRAWINGS, GENERAL REQUIREMENTS AND ALL ITEMS OF THE CONTRACT DOCUMENTS ARE EQUALLY BINDING ON ALL CONTRACTORS AND TRADES. EACH CONTRACTOR IS REQUIRED TO MAINTAIN FULL SETS OF THE CONTRACT DOCUMENTS FOR HIS EMPLOYEES USE ON THE PROJECT TO ASSURE THAT ALL WORK IS PROPERLY COORDINATED AND INSTALLED WITH THE WORK OF OTHER CONTRACTORS AND TRADES.

WHENEVER THERE ARE DISCREPANCIES BETWEEN DRAWINGS, OR BETWEEN THE DRAWINGS AND SPECIFICATIONS, OR CONFLICTS WITHIN THE SPECIFICATIONS AND/OR DRAWINGS, AND SUCH DISCREPANCY IS NOT CALLED TO THE ARCHITECT'S ATTENTION IN TIME TO PERMIT CLARIFICATION BY ADDENDUM, THE CONTRACTOR SHALL BASE HIS BID UPON PROVIDING THE BETTER QUALITY OR GREATER OF WORK OR MATERIAL CALLED FOR, SHALL SUBMIT A WRITTEN STATEMENT WITH HIS PROPOSAL NOTING SUCH DISCREPANCIES, AND SHALL SO FURNISH AND INSTALL SUCH BETTER QUALITY OR GREATER QUANTITY UNLESS OTHERWISE ORDERED IN WRITING.

Project No.
1667

Date:
11/12/2020
Drawn by:
JWA
Checked by:
GPK
Revisions

© STEWART–COOPER–NEWELL ARCHITECTS, P.A.

THIS DRAWING IS THE PROPERTY OF STEWART–COOPER–NEWELL ARCHITECTS, P.A. AND MAY BE PROTECTED BY COPYRIGHT LAWS. THIS DRAWING MAY NOT BE REPRODUCED, PUBLISHED OR USED IN ANY WAY WITHOUT THE WRITTEN PERMISSION OF STEWART–COOPER–NEWELL ARCHITECTS, P.A.

optima engineering
150 Fayetteville St., Suite 530, Raleigh, NC 27601
1527 South Tryon St., Suite 300, Charlotte NC 28203
Phone: 919-926-2200 • www.optimaengineering.com
North Carolina License Number C-0814

Stewart·Cooper·Newell Architects
719 East Second Avenue
Gastonia, NC 28054
Phone: 704.865.6311
Fax: 704.865.0046
1.800.671.0621
www.scn-architects.com

NORTH CAROLINA PROFESSIONAL SEAL 032219 ENGINEER GARY P. KOSTEN
11-12-20

BAY EXPANSION FOR
GREENVILLE FIRE RESCUE #1
GREENVILLE, NC

MECHANICAL NOTES, LEGEND, AND SPECIFICATIONS

Sheet No.
M0.01

THIS DRAWING IS AN INSTRUMENT OF SERVICE. THE DRAWING AND THE INFORMATION THEREON IS THE PROPERTY OF OPTIMA ENGINEERING, P.A. ANY REPRODUCTION, ALTERATION, OR USE FOR OTHER THAN THE INTENDED PROJECT, WITHOUT THE WRITTEN CONSENT OF OPTIMA ENGINEERING, P.A. IS EXPRESSLY FORBIDDEN. COPYRIGHT © OPTIMA ENGINEERING P.A. 2020, ALL RIGHTS RESERVED.

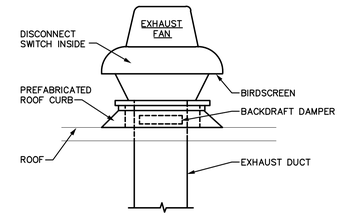


1 EXHAUST FAN DETAIL
NO SCALE

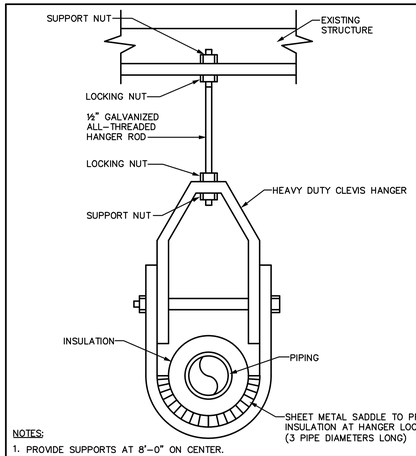


NOTES:
1. PROVIDE SUPPORTS AT 8'-0" ON CENTER.

2 PIPE HANGER DETAIL
NO SCALE

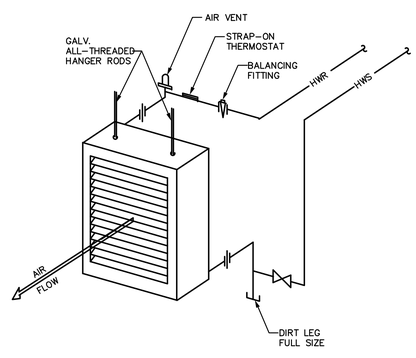


3 HOT WATER UNIT HEATER
NO SCALE

## VENTILATION CALCULATIONS (NCMC 2018, SECT 403):

| OCCUPANCY CLASSIFICATION | PEOPLE O/A RATE IN BREATHING ZONE (CFM/PERSON) | AREA O/A RATE IN BREATHING ZONE (CFM/SQ. FT.) | DEFAULT OCCUPANCY DENSITY (PEOPLE/1000 SQ. FT.) | EXHAUST AIRFLOW RATE (CFM/SQ. FT.) | AREA (SQ. FT.) | CALCULATED OCCUPANCY (PEOPLE) | CALCULATED PEOPLE O/A (CFM) | CALCULATED AREA O/A (CFM) | CALCULATED AREA E/A (CFM) |
|---|---|---|---|---|---|---|---|---|---|
| REPAIR GARAGES, ENCLOSED PARKING GARAGES | 0 | 0.000000 | 0 | 0.750000 | 5,135 | 0 | 0 | 0 | 3851 |
| | | | BLDG TOTAL OUTSIDE AIR REQ'D (Ez=0.8, CFM) | | | | 0 | | |
| | | | BUILDING TOTAL OUTSIDE AIR PROVIDED (CFM) | | | | 0 | | |
| | | | | | BUILDING TOTAL EXHAUST AIR REQUIRED (CFM) | | | | 3,851 |
| | | | | | BUILDING TOTAL EXHAUST AIR PROVIDED (CFM) | | | | 4,000 |

## FAN SCHEDULE

| SYMBOL | LOCATION | TYPE | CFM | APPROX. S.P. | DRIVE | FAN RPM | ELECTRICAL DATA WATTS | H.P. | VOLTAGE | MANUFACTURER GREENHECK | ACCESSORIES | CONTROLS |
|---|---|---|---|---|---|---|---|---|---|---|---|---|
| EF-1 | APPARATUS BAY | EXHAUST | 4000 | 0.25 | BELT | 595 | – | 1/2 | 277V-1ø | GB-220 | A,B,D,K | 3,7 |

ACCESSORIES

A: DISCONNECT SWITCH
B: GRAVITY BACKDRAFT DAMPER
C: MOTORIZED BACKDRAFT DAMPER
D: PREFAB. ROOF CURB
E: BIRDSCREEN
F: ACOUSTICAL LINING
G: HANGING BRACKETS WITH VIBRATION ISOLATION
H: WL, WALL LOUVER DISCHARGE
J: RCC OR GRS ROOF CAP (FLAT ROOF) OR RJ ROOF CAP (PITCHED ROOF)
K: WALL MOUNTING COLLAR
L: INLET GUARD
M: 2" WASHABLE ALUMINUM FILTERS
N: MOTORSIDE FAN GUARD
O: EXHAUST GRILLE
P: U.L. 762
Q: VENTED ROOF CURB EXTENSION
R: COMBINATION KITCHEN HOOD FAN CURB
S: INTERLOCK WITH FUME HOOD
T: PROVIDE DRAIN PLUG ACCESSORY

CONTROLS

1: WALL MOUNTED THERMOSTAT (REVERSE ACTING, SET FOR 80°)
2: INTERLOCK WITH ROOM LIGHT SWITCH (FAN SHALL OPERATE WHEN LIGHT IS ON IN ANY ROOM SERVED BY FAN)
3: WALL MOUNTED ON/OFF SWITCH WITH IDENTIFICATION LABEL
4: WALL MOUNTED MUSHROOM PUSH BUTTON SWITCH/STARTER WITH IDENTIFICATION LABEL
5: CONTROLLED BY BUILDING AUTOMATION SYSTEM
6: CONTINUOUS OPERATION
7: INTERLOCK WITH CARBON MONOXIDE SENSOR

NOTES:
1. ALL FANS SHALL BE U.L. LISTED AND LABELED AND SHALL BE AMCA CERTIFIED FOR SOUND AND AIR FLOW. ALL FANS INSTALLED INSIDE, ABOVE, OR ADJACENT TO OCCUPIED SPACES SHALL HAVE A MAXIMUM 9.0 INLET SONE LEVEL.
2. ALL FANS SHALL BE SUPPLIED BY ONE MANUFACTURER UNLESS NOTED OTHERWISE.
3. MECHANICAL CONTRACTOR SHALL PROVIDE MAGNETIC STARTER WITH AUXILIARY CONTACTS AS REQUIRED.
4. PROVIDE ALL DIRECT DRIVE FANS WITH AN INTERNALLY MOUNTED SPEED CONTROLLER.
5. BACKDRAFT DAMPER ON ROOF SUPPLY FANS SHALL BE MOTORIZED.

## EXISTING HOT WATER UNIT HEATER SCHEDULE

| SYMBOL | LOCATION | CFM | BTUH | GPM | WPD | RUNOUT | MOTOR R.P.M. | H.P. | VOLTAGE | MANUFACTURER McQUAY | ACCESSORIES |
|---|---|---|---|---|---|---|---|---|---|---|---|
| (EX) UH-5 | TRUCK BAYS | 1640 | 54,448 | 6.0 | 0.26' | 1" | – | 1/5 | 115V-1ø | UDH-080B | – |
| (EX) UH-6 | TRUCK BAYS | 1640 | 54,448 | 6.0 | 0.26' | 1" | – | 1/5 | 115V-1ø | UDH-080B | – |
| (EX) UH-7 | TRUCK BAYS | 1640 | 54,448 | 6.0 | 0.26' | 1" | – | 1/5 | 115V-1ø | UDH-080B | – |
| (EX) UH-8 | TRUCK BAYS | 1640 | 54,448 | 6.0 | 0.26' | 1" | – | 1/5 | 115V-1ø | UDH-080B | – |
| (EX) UH-9 | TRUCK BAYS | 1640 | 54,448 | 6.0 | 0.26' | 1" | – | 1/5 | 115V-1ø | UDH-080B | – |

NOTES:
1. HEATING CAPACITY BASED ON 60° F. E.A.T., 180° F. E.W.T., 160° F. L.W.T.

## NEW HOT WATER UNIT HEATER SCHEDULE

| SYMBOL | LOCATION | CFM | BTUH | GPM | WPD | RUNOUT | MOTOR R.P.M. | H.P. | VOLTAGE | MANUFACTURER TRANE | ACCESSORIES |
|---|---|---|---|---|---|---|---|---|---|---|---|
| UH-14 | TRUCK BAYS | 1528 | 58,533 | 7.03 | 0.44' | 1" | 1070 | 1/8 | 115V-1ø | UHP-102 | A,C,E |

NOTES:
1. HEATING CAPACITY BASED ON 60° F. E.A.T., 180° F. E.W.T. 160° F. L.W.T.
2. MAXIMUM WATER PRESSURE DROP SHALL BE 5'.
3. VERTICAL HEATER SHALL BE MOUNTED AT 18' AFF.
* MATCH EXISTING BUILDING STANDARDS

ACCESSORIES

A: DISCONNECT SWITCH
B: BUILT-IN THERMOSTAT
C: WALL MOUNTED THERMOSTAT
D: WALL MOUNTING BRACKETS
E: CEILING MOUNTED BRACKETS
F: ADJUSTABLE DISCHARGE LOUVERS

## GENERAL NOTES

ALL NOTES APPLY TO ALL DRAWINGS AND ALL TRADES. IT IS THE RESPONSIBILITY OF ALL CONTRACTORS AND TRADES TO COORDINATE THE INSTALLATION OF THEIR WORK WITH THE INSTALLATION OF WORK BY ALL OTHER CONTRACTORS AND TRADES. THE REQUIREMENTS OF THE DRAWINGS, GENERAL REQUIREMENTS AND ALL ITEMS OF THE CONTRACT DOCUMENTS ARE EQUALLY BINDING ON ALL CONTRACTORS AND TRADES. EACH CONTRACTOR IS REQUIRED TO MAINTAIN FULL SETS OF THE CONTRACT DOCUMENTS FOR HIS EMPLOYEES USE ON THE PROJECT TO ASSURE THAT ALL WORK IS PROPERLY COORDINATED AND INSTALLED WITH THE WORK OF OTHER CONTRACTORS AND TRADES.

WHENEVER THERE ARE DISCREPANCIES BETWEEN DRAWINGS, OR BETWEEN THE DRAWINGS AND SPECIFICATIONS, OR CONFLICTS WITHIN THE SPECIFICATIONS AND/OR DRAWINGS, AND SUCH DISCREPANCY IS NOT CALLED TO THE ARCHITECT'S ATTENTION IN TIME TO PERMIT CLARIFICATION BY ADDENDUM, THE CONTRACTOR SHALL BASE HIS BID UPON PROVIDING THE BETTER QUALITY OR GREATER OF WORK OR MATERIAL CALLED FOR, SHALL SUBMIT A WRITTEN STATEMENT WITH HIS PROPOSAL NOTING SUCH DISCREPANCIES, AND SHALL SO FURNISH AND INSTALL SUCH BETTER QUALITY OR GREATER QUANTITY UNLESS OTHERWISE ORDERED IN WRITING.

Project No.
1667

Date:
11/12/2020
Drawn by:
JWA
Checked by:
GPK
Revisions

© STEWART-COOPER-NEWELL ARCHITECTS, P.A.

THIS DRAWING IS THE PROPERTY OF STEWART-COOPER-NEWELL ARCHITECTS, P.A. ANY REPRODUCTION, ALTERATION, OR USE FOR OTHER THAN THE INTENDED PROJECT, WITHOUT THE WRITTEN CONSENT OF STEWART-COOPER-NEWELL ARCHITECTS, P.A. IS EXPRESSLY FORBIDDEN. COPYRIGHT © STEWART-COOPER-NEWELL ARCHITECTS, P.A. 2020, ALL RIGHTS RESERVED. THIS DRAWING MAY NOT BE REPRODUCED, PUBLISHED OR USED IN ANY WAY WITHOUT THE WRITTEN PERMISSION OF STEWART-COOPER-NEWELL ARCHITECTS, P.A.

optima engineering
150 Fayetteville St., Suite 520, Raleigh, NC 27601
1527 South Tryon St., Suite 300, Charlotte NC 28203
Phone: 919-926-2200 • www.optimaengineering.com
North Carolina License Number C-0814

Stewart·Cooper·Newell Architects
719 East Second Avenue
Gastonia, NC 28054
Phone: 704.865.6311
Fax: 704.865.0046
1.800.671.0621
www.scn-architects.com

NORTH CAROLINA PROFESSIONAL SEAL 032219 ENGINEER GARY P. KOSTEN
11-12-20

BAY EXPANSION FOR
GREENVILLE FIRE RESCUE #1
GREENVILLE, NC

MECHANICAL SCHEDULES AND DETAILS

Sheet No.
M0.02

THIS DRAWING IS AN INSTRUMENT OF SERVICE. THE DRAWING AND THE INFORMATION THEREON IS THE PROPERTY OF OPTIMA ENGINEERING, P.A. ANY REPRODUCTION, ALTERATION, OR USE FOR OTHER THAN THE INTENDED PROJECT, WITHOUT THE WRITTEN CONSENT OF OPTIMA ENGINEERING, P.A. IS EXPRESSLY FORBIDDEN. COPYRIGHT © OPTIMA ENGINEERING P.A. 2020, ALL RIGHTS RESERVED.

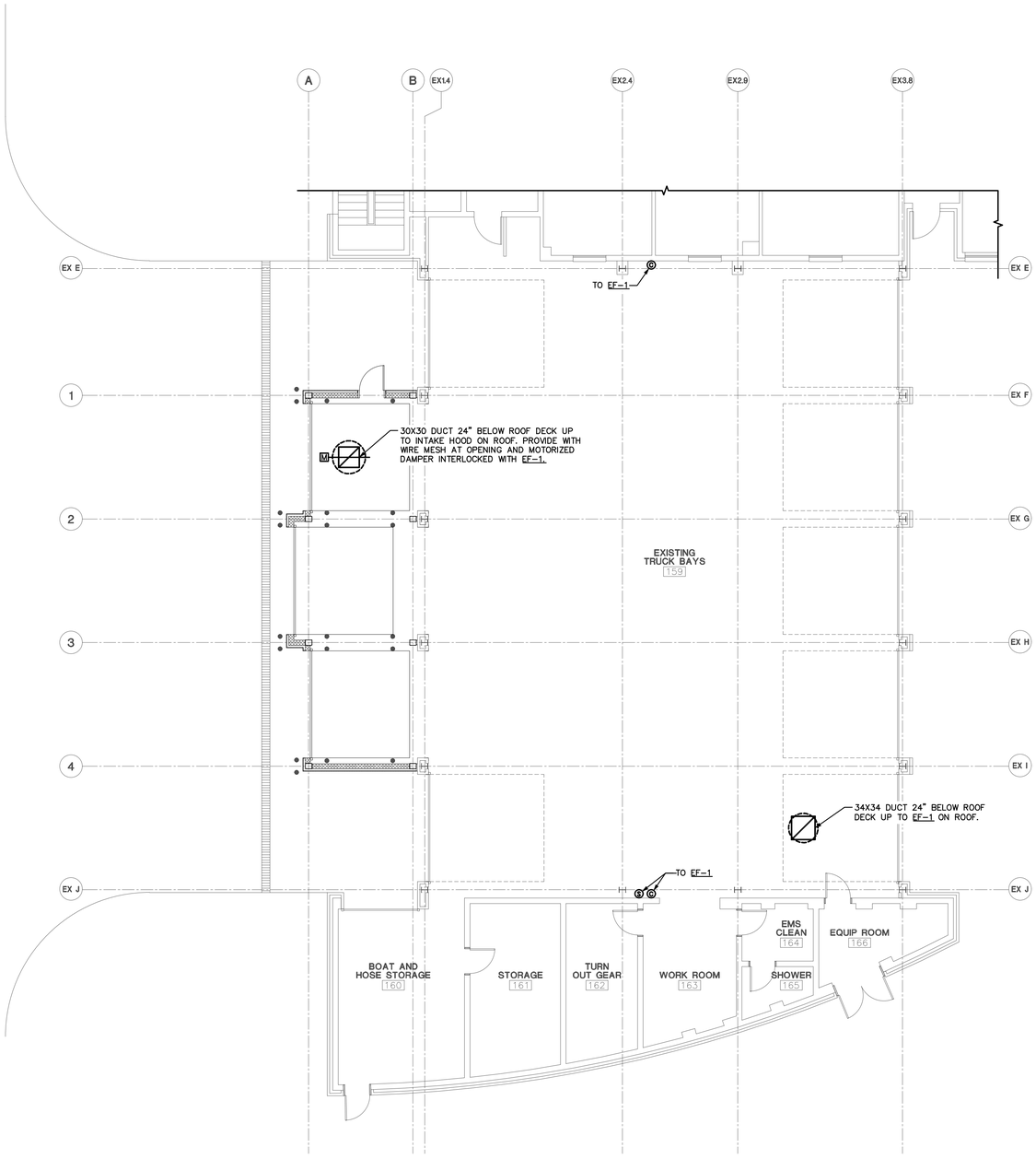


1 NEW WORK DUCTWORK FLOOR PLAN - MECHANICAL

1/8" = 1'-0"

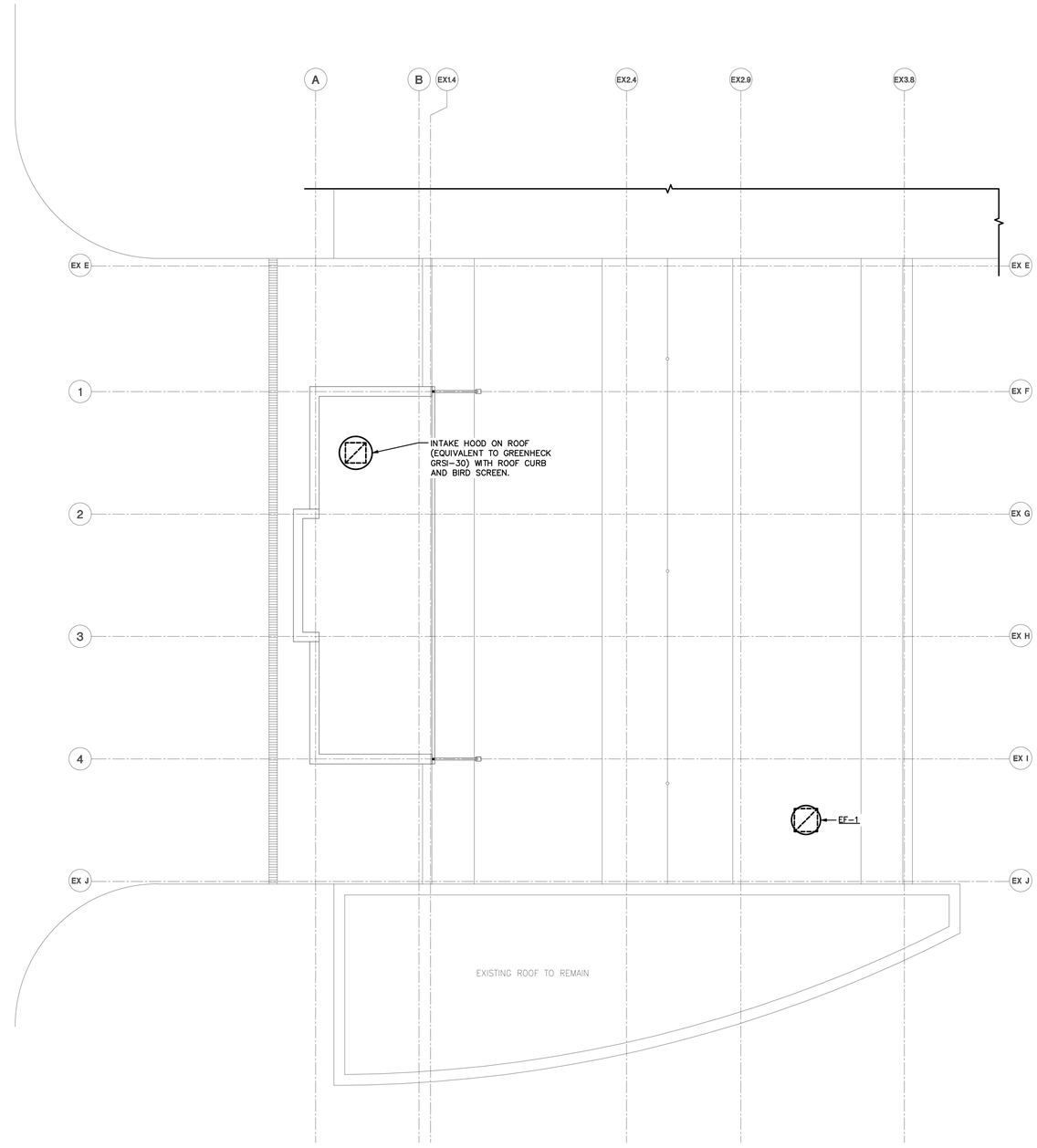


2 NEW WORK DUCTWORK ROOF PLAN - MECHANICAL

1/8" = 1'-0"

## GENERAL NOTES

ALL NOTES APPLY TO ALL DRAWINGS AND ALL TRADES. IT IS THE RESPONSIBILITY OF ALL CONTRACTORS AND TRADES TO COORDINATE THE INSTALLATION OF THEIR WORK WITH THE INSTALLATION OF WORK BY ALL OTHER CONTRACTORS AND TRADES. THE REQUIREMENTS OF THE DRAWINGS, GENERAL REQUIREMENTS AND ALL ITEMS OF THE CONTRACT DOCUMENTS ARE EQUALLY BINDING ON ALL CONTRACTORS AND TRADES. EACH CONTRACTOR IS REQUIRED TO MAINTAIN FULL SETS OF THE CONTRACT DOCUMENTS FOR HIS EMPLOYEES USE ON THE PROJECT TO ASSURE THAT ALL WORK IS PROPERLY COORDINATED AND INSTALLED WITH THE WORK OF OTHER CONTRACTORS AND TRADES.

WHENEVER THERE ARE DISCREPANCIES BETWEEN DRAWINGS, OR BETWEEN THE DRAWINGS AND SPECIFICATIONS, OR CONFLICTS WITHIN THE SPECIFICATIONS AND/OR DRAWINGS, AND SUCH DISCREPANCY IS NOT CALLED TO THE ARCHITECT'S ATTENTION IN TIME TO PERMIT CLARIFICATION BY ADDENDUM, THE CONTRACTOR SHALL BASE HIS BID UPON PROVIDING THE BETTER QUALITY OR GREATER OF WORK OR MATERIAL CALLED FOR, SHALL SUBMIT A WRITTEN STATEMENT WITH HIS PROPOSAL NOTING SUCH DISCREPANCIES, AND SHALL SO FURNISH AND INSTALL SUCH BETTER QUALITY OR GREATER QUANTITY UNLESS OTHERWISE ORDERED IN WRITING.

**Project No.**
**1667**

**Date:**
**11/12/2020**
**Drawn by:**
**JWA**
**Checked by:**
**GPK**
**Revisions**

© STEWART-COOPER-NEWELL ARCHITECTS, P.A.

THIS DRAWING IS THE PROPERTY OF STEWART-COOPER-NEWELL ARCHITECTS, P.A. UNDER THE PROTECTION OF COPYRIGHT LAWS. THIS DRAWING MAY NOT BE REPRODUCED, PUBLISHED OR USED IN ANY WAY WITHOUT THE WRITTEN PERMISSION OF STEWART-COOPER-NEWELL ARCHITECTS, P.A.

optima engineering
150 Fayetteville St., Suite 520, Raleigh, NC 27601
1527 South Tryon St., Suite 300, Charlotte NC 28203
Phone: 919-926-2200 • www.optimaengineering.com
North Carolina License Number C-0814

Stewart · Cooper · Newell Architects
719 East Second Avenue
Gastonia, NC 28054
Phone: 704.865.6311
Fax: 704.865.0046
1.800.671.0621
www.scn-architects.com

NORTH CAROLINA PROFESSIONAL SEAL 032219 ENGINEER GARY P. KOSTEN 11-12-20

**BAY EXPANSION FOR**
**GREENVILLE FIRE RESCUE #1**
**GREENVILLE, NC**

**NEW WORK DUCTWORK PLAN - MECHANICAL**

**Sheet No.**
**M1.01**

THIS DRAWING IS AN INSTRUMENT OF SERVICE. THE DRAWING AND THE INFORMATION THEREON IS THE PROPERTY OF OPTIMA ENGINEERING, P.A. ANY REPRODUCTION, ALTERATION, OR USE FOR OTHER THAN THE INTENDED PROJECT, WITHOUT THE WRITTEN CONSENT OF OPTIMA ENGINEERING, P.A. IS EXPRESSLY FORBIDDEN. COPYRIGHT © OPTIMA ENGINEERING P.A. 2020, ALL RIGHTS RESERVED.

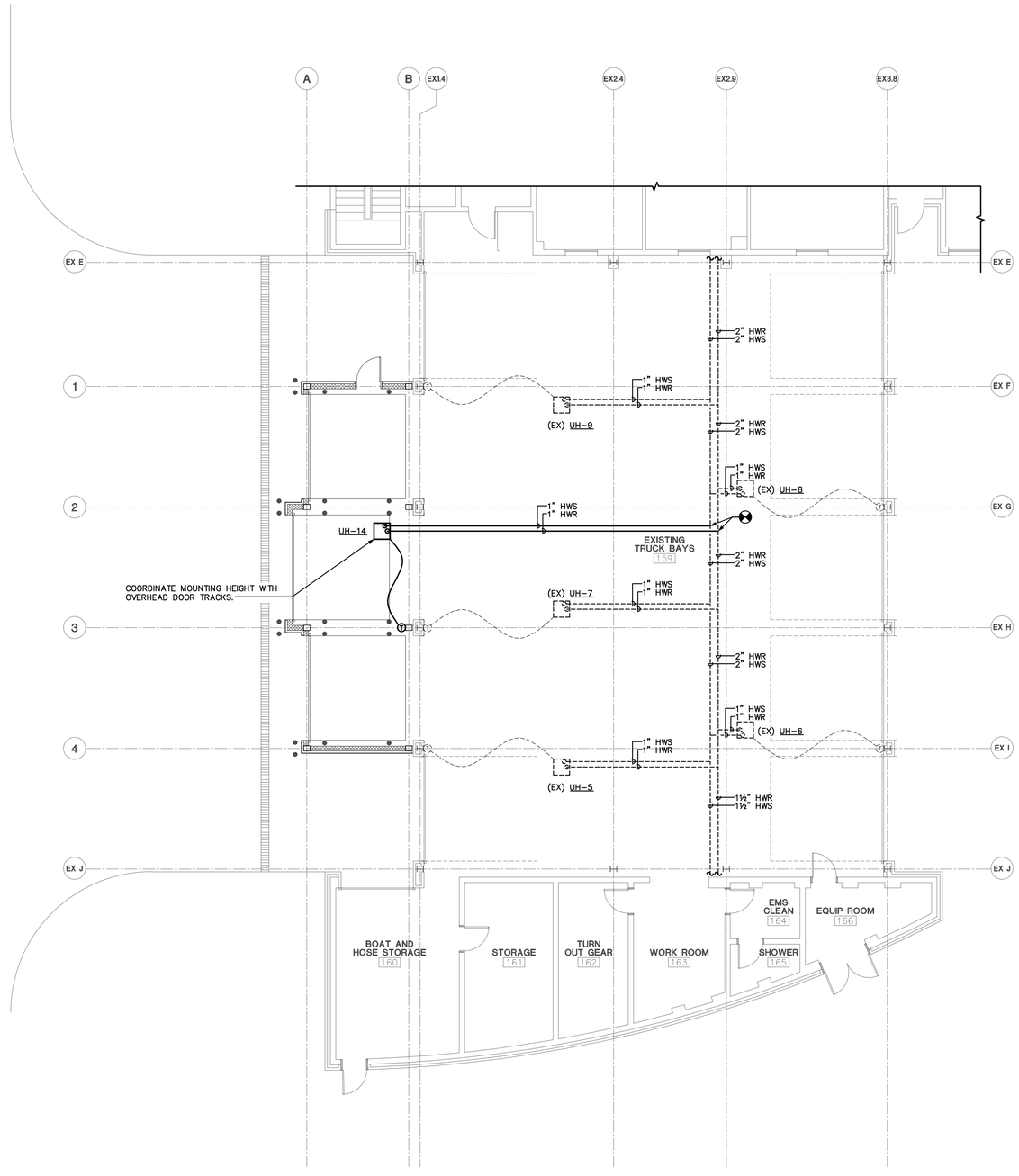


1 NEW WORK PIPING FLOOR PLAN - MECHANICAL

1/8" = 1'-0"

## GENERAL NOTES

ALL NOTES APPLY TO ALL DRAWINGS AND ALL TRADES. IT IS THE RESPONSIBILITY OF ALL CONTRACTORS AND TRADES TO COORDINATE THE INSTALLATION OF THEIR WORK WITH THE INSTALLATION OF WORK BY ALL OTHER CONTRACTORS AND TRADES. THE REQUIREMENTS OF THE DRAWINGS, GENERAL REQUIREMENTS AND ALL ITEMS OF THE CONTRACT DOCUMENTS ARE EQUALLY BINDING ON ALL CONTRACTORS AND TRADES. EACH CONTRACTOR IS REQUIRED TO MAINTAIN FULL SETS OF THE CONTRACT DOCUMENTS FOR HIS EMPLOYEES USE ON THE PROJECT TO ASSURE THAT ALL WORK IS PROPERLY COORDINATED AND INSTALLED WITH THE WORK OF OTHER CONTRACTORS AND TRADES.

WHENEVER THERE ARE DISCREPANCIES BETWEEN DRAWINGS, OR BETWEEN THE DRAWINGS AND SPECIFICATIONS, OR CONFLICTS WITHIN THE SPECIFICATIONS AND/OR DRAWINGS, AND SUCH DISCREPANCY IS NOT CALLED TO THE ARCHITECT'S ATTENTION IN TIME TO PERMIT CLARIFICATION BY ADDENDUM, THE CONTRACTOR SHALL BASE HIS BID UPON PROVIDING THE BETTER QUALITY OR GREATER OF WORK OR MATERIAL CALLED FOR, SHALL SUBMIT A WRITTEN STATEMENT WITH HIS PROPOSAL NOTING SUCH DISCREPANCIES, AND SHALL SO FURNISH AND INSTALL SUCH BETTER QUALITY OR GREATER QUANTITY UNLESS OTHERWISE ORDERED IN WRITING.

Project No.
1667

Date:
11/12/2020
Drawn by:
JWA
Checked by:
GPK
Revisions

© STEWART-COOPER-NEWELL ARCHITECTS, P.A.

THIS DRAWING IS THE PROPERTY OF STEWART-COOPER-NEWELL ARCHITECTS, P.A. AND IS PROTECTED BY FEDERAL COPYRIGHT LAWS. THIS DRAWING MAY NOT BE REPRODUCED, PUBLISHED OR USED IN ANY WAY WITHOUT THE WRITTEN PERMISSION OF STEWART-COOPER-NEWELL ARCHITECTS, P.A.

optima engineering
150 Fayetteville St., Suite 520, Raleigh, NC 27601
1527 South Tryon St., Suite 300, Charlotte NC 28203
Phone: 919-926-2200 ■ www.optimaengineering.com
North Carolina License Number C-0814

Stewart·Cooper·Newell Architects
719 East Second Avenue
Gastonia, NC 28054
Phone: 704.865.6311
Fax: 704.865.0046
1.800.671.0621
www.scn-architects.com

NORTH CAROLINA PROFESSIONAL SEAL 032219 ENGINEER GARY P. KOSTEN
11-12-20

BAY EXPANSION FOR
GREENVILLE FIRE RESCUE #1
GREENVILLE, NC

NEW WORK PIPING PLAN - MECHANICAL

Sheet No.
M2.01

THIS DRAWING IS AN INSTRUMENT OF SERVICE. THE DRAWING AND THE INFORMATION THEREON IS THE PROPERTY OF OPTIMA ENGINEERING, P.A. ANY REPRODUCTION, ALTERATION, OR USE FOR OTHER THAN THE INTENDED PROJECT, WITHOUT THE WRITTEN CONSENT OF OPTIMA ENGINEERING, P.A. IS EXPRESSLY FORBIDDEN. COPYRIGHT © OPTIMA ENGINEERING P.A. 2020, ALL RIGHTS RESERVED.

# SYMBOL SCHEDULE

## 2018 NORTH CAROLINA ENERGY CONSERVATION CODE

COMMERCIAL ENERGY EFFICIENCY – ELECTRICAL SUMMARY

C401 METHOD OF COMPLIANCE

- ■ 2018 NCECC CHAPTER 4
- ☐ NC SPECIFIC COMCHECK PROVIDED
- ☐ N/A BASED ON PROJECT SCOPE
- ☐ ASHRAE 90.1–2013

C406 ADDITIONAL EFFICIENCY PACKAGE OPTIONS

- ☐ C406.1.1 EFFICIENT MECH EQUIPMENT
- ☐ C406.1.4 ON–SITE RENEWABLE ENERGY
- ■ C406.1.2 REDUCED LTG DENSITY
- ☐ C406.1.5 DEDICATED OA SYSTEM
- ☐ C406.1.3 ENHANCED DIGITAL LTG CNTLS
- ☐ C406.1.6 HI–EFF SERVICE WTR HTG
- ☐ NOT APPLICABLE BASED ON PROJECT SCOPE

C405.2 – LIGHTING CONTROLS (MANDATORY REQUIREMENTS):

- ■ LIGHTING SYSTEMS ARE PROVIDED WITH CONTROLS AS REQUIRED PER SECTION C405.2, EXCEPT WHERE EXEMPT.
- ☐ NOT APPLICABLE

C405.3 – EXIT SIGNS (MANDATORY REQUIREMENTS):

- ■ INTERNALLY ILLUMINATED EXIT SIGNS DO NOT EXCEED 5 WATTS PER SIDE.
- ☐ NOT APPLICABLE

C405.4 – INTERIOR LIGHTING POWER REQUIREMENTS (PRESCRIPTIVE) (NON–EXEMPT):

- ☐ NOT APPLICABLE PER 2018 NCECC C503.1, EXCEPTION 2.G.

C405.4.1 – TOTAL CONNECTED INTERIOR LIGHTING POWER:

2,584 WATTS SPECIFIED

29 % REDUCTION OF SPECIFIED VS. ALLOWED (APPLICABLE IF C406.1.2 IS SELECTED)

C405.4.2 – TOTAL ALLOWABLE INTERIOR LIGHTING POWER:

METHOD OF COMPLIANCE:

- ■ BUILDING AREA METHOD
- ☐ SPACE–BY–SPACE METHOD

3,640 WATTS ALLOWED

C405.5.1 – EXTERIOR BUILDING LIGHTING POWER (NON–EXEMPT):

- ☐ NOT APPLICABLE

TOTAL CONNECTED EXTERIOR LIGHTING POWER:

210 WATTS SPECIFIED

TOTAL ALLOWABLE EXTERIOR LIGHTING POWER:

1300 WATTS ALLOWED

C405.6 – ELECTRICAL ENERGY CONSUMPTION (DWELLING UNITS):

- ☐ SEPARATE ELECTRICAL METERING HAS BEEN PROVIDED FOR EACH DWELLING UNIT IN GROUP R–2 BUILDINGS.
- ■ NOT APPLICABLE

C405.7 – ELECTRICAL TRANSFORMERS (MANDATORY REQUIREMENTS):

- ■ ELECTRICAL TRANSFORMERS HAVE BEEN SPECIFIED TO MEET MINIMUM EFFICIENCY REQUIREMENTS PER C405.7, EXCEPT WHERE EXEMPT.
- ☐ NOT APPLICABLE

C405.8 – ELECTRICAL MOTORS (MANDATORY REQUIREMENTS):

- ■ ELECTRICAL MOTORS HAVE BEEN SPECIFIED TO MEET MINIMUM EFFICIENCY REQUIREMENTS PER C405.8, EXCEPT WHERE EXEMPT.
- ☐ NOT APPLICABLE

## ABBREVIATIONS

| | |
|---|---|
| +42" | DIMENSION INDICATES HEIGHT ABOVE FINISHED FLOOR AT WHICH CENTER OF DEVICE IS TO MOUNTED. SEE PLANS. |
| 3R | NEMA 3R |
| AFF | ABOVE FINISHED FLOOR |
| AHJ | AUTHORITY HAVING JURISDICTION |
| AHU | AIR HANDLER UNIT |
| C.B. | CIRCUIT BREAKER |
| EC | EMPTY CONDUIT WITH PULL CORD |
| E.C. | ELECTRICAL CONTRACTOR |
| EWC | ELECTRIC WATER COOLER |
| EWH | ELECTRIC WATER HEATER |
| FACP | FIRE ALARM CONTROL PANEL |
| FPN | FUSE PER NAMEPLATE |
| LC | LIGHTING CONTACTOR |
| M.C. | MECHANICAL CONTRACTOR |
| P.C. | PLUMBING CONTRACTOR |
| U.G. | UNDERGROUND |
| WP | WEATHERPROOF |
| S.E. | SERVICE ENTRANCE |
| EM | EMERGENCY FIXTURE WITH BATTERY OR GEN. BACK–UP |
| ER | EXISTING ITEM RELOCATED TO THIS LOCATION. |
| RL | EXISTING ITEM TO BE RELOCATED. |
| RM | EXISTING ITEM TO REMAIN. |
| RP | EXISTING ITEM TO BE REPLACED. |
| RV | EXISTING ITEM TO BE REMOVED. |
| Isc | RMS SYMMETRICAL SHORT CIRCUIT CURRENT |
| AIC | AMPERE INTERRUPTING CAPACITY (EQUIPMENT RATING) |

## DEVICES AND PATHWAYS

- WIRING SYSTEM CONCEALED IN WALL OR CEILING. WHEN SHOWN, CROSS LINES INDICATE NUMBER OF WIRES. (GROUND WIRES ARE NOT SHOWN)
- WIRING SYSTEM CONCEALED IN OR UNDER SLAB OR UNDERGROUND.
- WIRING SYSTEM EXPOSED
- CONDUIT TURNED UP TO FLOOR ABOVE.
- CONDUIT TURNED DOWN TO FLOOR BELOW.
- BRANCH CIRCUIT HOMERUN TO PANEL.
- JUNCTION BOX WITH CONNECTION TO EQUIPMENT SERVED. 4" SQUARE BOX WITH A SINGLE–GANG OPENING AND PLASTER RING.
- DUPLEX RECEPTACLE, 20 AMP, 120 VOLT (USE 20 AMP FOR SINGLE RECEPTACLE ON A CIRCUIT.) HUBBELL 5352, OR EQUAL.
- GFI — GROUND FAULT RECEPTACLE. NEMA 5–20R DUPLEX. ALL RECEPTACLES INSTALLED OUTSIDE, WITHIN 6' OF A SINK OR IN A KITCHEN SHALL BE GFCI.
- WP — WEATHERPROOF RECEPTACLE. NEMA 5–20R GFI DUPLEX. COVER SHALL BE INTERMATIC #WP1020 (CLEAR) OR SPECIFICATION EQUAL.

## PANELS, DISCONNECTS

- CONNECTION TO MOTOR. STARTER PROVIDED BY OTHERS UNLESS OTHERWISE NOTED.
- $S_M$ — FRACTIONAL HORSEPOWER MANUAL MOTOR STARTER, WITH OVERLOAD PROTECTION
- FUSED HEAVY DUTY DISCONNECT SWITCH. NUMERALS INDICATE SWITCH RATING/FUSE SIZE. NEMA 1 ENCLOSURE, UNLESS OTHERWISE NOTED.
- PANELBOARD. SEE SCHEDULE FOR MOUNTING. TOP OF PANEL AT 6'–6" AFF.
- FDB — DOOR MOTOR CONTROL. MOUNT +48" AFF, CONTROLS SHALL BE UP, DOWN, AND STOP MOUNTED ON 4" SQUARE BOX (FLUSH BOX)

## FIRE ALARM

- FACP — FIRE ALARM CONTROL PANEL.
- F — FIRE ALARM MANUAL STATION.
- CEILING MOUNTED SMOKE DETECTOR. FA VENDOR PROVIDED.
- X — CEILING MOUNTED HEAT DETECTOR.
- 15 — ADA COMPLIANT WALL MOUNT FIRE ALARM HORN WITH STROBE LIGHT, 15CD UNLESS OTHERWISE NOTED. MATCH EXISTING FIXTURE FINISH.

## SECURITY

- CR — CARD READER, MINIMUM 1/2" CONDUIT. PROVIDE SINGLE GANG JUNCTION BOX AND PULL STRING. SEE CARD READER DETAIL FOR ADDITIONAL REQUIREMENTS OF PATHWAYS AND CABLING.
- DC — DOOR CONTACT, MINIMUM 1/2" CONDUIT. PROVIDE SINGLE GANG JUNCTION BOX AND PULL STRING. SEE CARD READER DETAIL FOR ADDITIONAL REQUIREMENTS OF PATHWAYS AND CABLING.

## LIGHTING (SEE FIXTURE SCH.)

- FLUORESCENT LIGHTING FIXTURE. SEE FIXTURE SCHEDULE. SEE HIGH BAY FIXTURE MOUNTING DETAIL.
- WALL MOUNTED LED LIGHTING FIXTURE.
- FLUORESCENT OR LED FIXTURE WITH EMERGENCY BATTERY BALLAST OR DRIVER. PROVIDE 1100 LUMEN INVERTER RATED FOR 90 MINUTE OPERATION. SEE FIXTURE SCHEDULE FOR FIXTURE TYPE, EMERGENCY DEVICE SHALL SUPPLEMENT FIXTURE.
- EMERGENCY BATTERY PACK/EXIT COMBO FIXTURE WITH 90 MINUTE BATTERY BACKUP, SEE FIXTURE SCHEDULE.
- S — SINGLE POLE SWITCH, 20 AMP, 120/277 VOLT, COOPER AH 1221, OR EQUAL BY HUBBELL, LEVITON, AND PASS & SEYMOUR.
- $S_3$ — THREE WAY SWITCH, 20 AMP, 120/277 VOLT, COOPER 1223, THREE WAY SWITCH, 20 AMP, 120/277 VOLT, COOPER 1223, OR EQUAL BY HUBBELL, LEVITON, AND PASS & SEYMOUR.
- OC IR — FIXTURE MOUNTED OCCUPANCY SENSOR. INFRARED TECHNOLOGY. LEVITON OSFHU HIGH–BAY SENSOR, OR EQUAL.

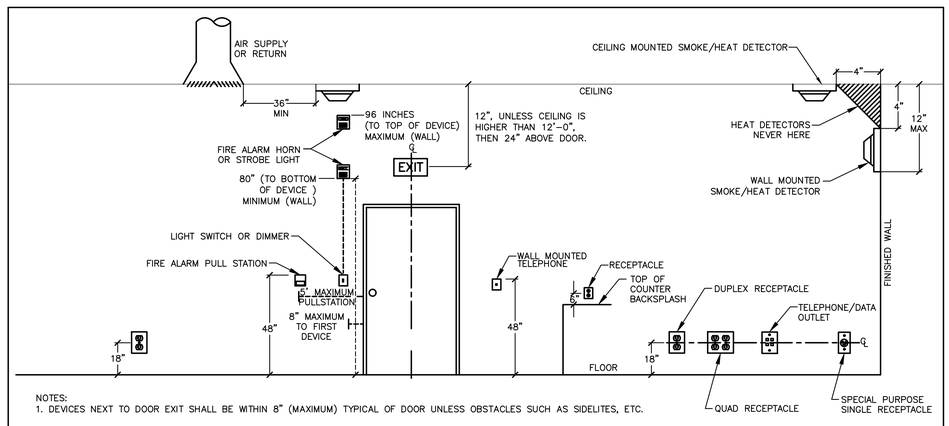


NOTES:
1. DEVICES NEXT TO DOOR EXIT SHALL BE WITHIN 8" (MAXIMUM) TYPICAL OF DOOR UNLESS OBSTACLES SUCH AS SIDELITES, ETC.

1 MOUNTING HEIGHTS OF DEVICES – ELEVATION
NO SCALE

## ELECTRICAL SHEET INDEX


| PLAN NUMBER | PLAN NAME |
|---|---|
| 10.00 | ELECTRICAL NOTES & LEGENDS |
| 10.01 | ELECTRICAL SPECIFICATIONS |
| 10.02 | WALL PENETRATION DETAILS |
| 10.03 | ELECTRICAL DETAILS |
| 10.10 | ELECTRICAL FLOOR PLAN – EXISTING & DEMOLITION |
| 10.11 | ELECTRICAL FLOOR PLAN – NEW WORK |
| 10.12 | ELECTRICAL ROOF PLAN |
| 10.21 | LIGHTING PLAN – NEW WORK |
| 10.51 | ELECTRICAL SCHEDULES & POWER RISER |


## GENERAL NOTES

ALL NOTES APPLY TO ALL DRAWINGS AND ALL TRADES. IT IS THE RESPONSIBILITY OF ALL CONTRACTORS AND TRADES TO COORDINATE THE INSTALLATION OF THEIR WORK WITH THE INSTALLATION OF WORK BY ALL OTHER CONTRACTORS AND TRADES. THE REQUIREMENTS OF THE DRAWINGS, GENERAL REQUIREMENTS AND ALL ITEMS OF THE CONTRACT DOCUMENTS ARE EQUALLY BINDING ON ALL CONTRACTORS AND TRADES. EACH CONTRACTOR IS REQUIRED TO MAINTAIN FULL SETS OF THE CONTRACT DOCUMENTS FOR HIS EMPLOYEES USE ON THE PROJECT TO ASSURE THAT ALL WORK IS PROPERLY COORDINATED AND INSTALLED WITH THE WORK OF OTHER CONTRACTORS AND TRADES.

WHENEVER THERE ARE DISCREPANCIES BETWEEN DRAWINGS, OR BETWEEN THE DRAWINGS AND SPECIFICATIONS, OR CONFLICTS WITHIN THE SPECIFICATIONS AND/OR DRAWINGS, AND SUCH DISCREPANCY IS NOT CALLED TO THE ARCHITECT'S ATTENTION IN TIME TO PERMIT CLARIFICATION BY ADDENDUM, THE CONTRACTOR SHALL BASE HIS BID UPON PROVIDING THE BETTER QUALITY OR GREATER OF WORK OR MATERIAL CALLED FOR, SHALL SUBMIT A WRITTEN STATEMENT WITH HIS PROPOSAL NOTING SUCH DISCREPANCIES, AND SHALL SO FURNISH AND INSTALL SUCH BETTER QUALITY OR GREATER QUANTITY UNLESS OTHERWISE ORDERED IN WRITING.

Project No.
1667

Date:
11/12/2020
Drawn by:
MCH
Checked by:
MKG
Revisions


© STEWART–COOPER–NEWELL ARCHITECTS, P.A.

THIS DRAWING IS THE PROPERTY OF STEWART–COOPER–NEWELL ARCHITECTS, P.A. UNDER THE COPYRIGHT PROTECTION LAWS. THIS DRAWING MAY NOT BE REPRODUCED, PUBLISHED OR USED IN ANY WAY WITHOUT THE WRITTEN PERMISSION OF STEWART–COOPER–NEWELL ARCHITECTS, P.A.



optima engineering
150 Fayetteville St., Suite 520, Raleigh, NC 27601
1527 South Tryon St., Suite 300, Charlotte NC 28203
Phone: 919-926-2200 ◆ www.optimaengineering.com
North Carolina License Number C-0814

Stewart·Cooper·Newell Architects
719 East Second Avenue
Gastonia, NC 28054
Phone: 704.865.6311
Fax: 704.865.0046
1.800.671.0621
www.scn-architects.com


NORTH CAROLINA PROFESSIONAL SEAL 042210 ENGINEER MORGAN K. CUNNINGHAM
11/12/2020

BAY EXPANSION FOR
GREENVILLE FIRE RESCUE #1
GREENVILLE, NC

ELECTRICAL LEGEND AND NOTES

Sheet No.
10.00


THIS DRAWING IS AN INSTRUMENT OF SERVICE. THE DRAWING AND THE INFORMATION THEREON IS THE PROPERTY OF OPTIMA ENGINEERING, P.A. ANY REPRODUCTION, ALTERATION, OR USE FOR OTHER THAN THE INTENDED PROJECT, WITHOUT THE WRITTEN CONSENT OF OPTIMA ENGINEERING, P.A. IS EXPRESSLY FORBIDDEN. COPYRIGHT © OPTIMA ENGINEERING P.A. 2020, ALL RIGHTS RESERVED.

1. GENERAL:

A. THE WORK COVERED BY THESE SPECIFICATIONS CONSISTS OF FURNISHING ALL LABOR, EQUIPMENT, MATERIALS AND SUPPLIES AS NECESSARY FOR THE COMPLETE AND SATISFACTORY OPERATING ELECTRICAL SYSTEMS AS SHOWN ON THE PLANS.
B. ALL WORK SHALL BE IN ACCORDANCE WITH THE NATIONAL ELECTRICAL CODE, NFPA, STATE BUILDING CODE, AND ANY OTHER LOCAL REQUIREMENTS THAT MAY APPLY.
C. CONTRACTOR SHALL OBTAIN AND PAY FOR ALL ELECTRICAL PERMITS AND INSPECTION FEES.
D. ALL MATERIALS AND EQUIPMENT SHALL BE NEW AND SHALL BE LISTED BY THE UNDERWRITER'S LABORATORIES, INC. OR BY A STATE APPROVED THIRD PARTY TESTING AGENCY FOR THE USE INTENDED WHERE A STANDARD FOR SUCH MATERIALS AND USE EXISTS. ALL ITEMS OF THE SAME TYPE AND RATING SHALL BE IDENTICAL AND OF THE SAME MANUFACTURER.
E. CONTRACTOR SHALL SUBMIT SHOP DRAWINGS AND CATALOG DATA IN ELECTRONIC FORMAT (PDF) FOR ALL ELECTRICAL ITEMS IN THE SCOPE OF WORK, INCLUDING, BUT NOT LIMITED TO, RACEWAYS, BOXES, FITTINGS, CONDUCTORS, LUMINAIRES, LAMPS, BALLASTS, DRIVERS, WIRING DEVICES, SAFETY SWITCHES, DISCONNECTS, FIRE ALARM, TELECOMMUNICATIONS, ETC. FOR APPROVAL AS APPLICABLE FOR THE PROJECT. ONE COMPLETE SET OF APPROVED SUBMITTALS SHALL BE MAINTAINED AT THE JOB SITE.
F. ALL COST ASSOCIATED WITH SUBSTITUTED EQUIPMENT TO COMPLY WITH THE BASIS OF DESIGN, INCLUDING PROVIDING MAINTENANCE ACCESS, CLEARANCE, CONDUIT, WIRING, REPLACEMENT OF OTHER SYSTEM COMPONENTS, BUILDING ALTERATIONS, METHODS, ETC., SHALL BE INCLUDED IN THE ORIGINAL BASE BID. NO ADDITIONAL COSTS ASSOCIATED WITH SUBSTITUTED EQUIPMENT WILL BE APPROVED AFTER BIDS HAVE BEEN ACCEPTED AND ALL COSTS WILL BE THE RESPONSIBILITY OF THE ELECTRICAL CONTRACTOR. CREDITS SHALL BE GIVEN TO THE OWNER WHERE SUCH EQUIPMENT AND METHODS RESULT IN LESS EXPENSE TO THE CONTRACTOR.
G. ONE COMPLETE SET OF THE LATEST CONSTRUCTION PLANS OF ALL TRADES SHALL BE MAINTAINED AT THE JOB SITE. IN ADDITION, ALL ADDENDUMS, BULLETINS, AND/OR SKETCHES SHALL BE INCORPORATED INTO THE ON-SITE CONSTRUCTION PLANS AS THE JOB PROGRESSES.
H. COMPLETELY ADEQUATE HOUSING SHALL BE PROVIDED FOR ALL MATERIALS STORED ON JOB SITE. ONLY CONDUIT MAY BE STORED OUTSIDE, BUT NOT IN CONTACT WITH THE GROUND.
I. WIRING SHALL BE TESTED FOR CONTINUITY AND GROUNDS BEFORE BEING ENERGIZED. FAULTY WIRING SHALL BE REPLACED AT NO ADDITIONAL EXPENSE TO THE OWNER.
J. PROVIDE ALL CUTTING AND PATCHING FOR INSTALLATION OF WORK AND REPAIR ANY DAMAGE DONE.
K. THE ELECTRICAL CONTRACTOR SHALL CONNECT ALL EQUIPMENT REQUIRING ELECTRICAL CONNECTIONS (UNLESS OTHERWISE NOTED) EXCEPT FOR CONTROL WIRING FOR EQUIPMENT NOT PROVIDED BY THE ELECTRICAL CONTRACTOR. CONTROL WIRING FOR SUCH EQUIPMENT SHALL BE PROVIDED BY THE RESPECTIVE DISCIPLINE.
L. ALL ELECTRICAL JUNCTION BOXES, SWITCHGEAR, CABLING, VOICE/DATA OUTLETS, LOW VOLTAGE CABINETS, EMERGENCY RECEPTACLES, ETC. SHALL BE LABELED ACCORDING TO PANEL/RACK AND CIRCUIT NUMBER.
M. UPON COMPLETION OF WORK, CONTRACTOR SHALL PRESENT ENGINEER WITH CERTIFICATE OF APPROVAL FROM LOCAL INSPECTOR AND/OR AUTHORITY HAVING JURISDICTION BEFORE WORK IS BE APPROVED FOR FINAL PAYMENT.
N. CONTRACTOR SHALL GUARANTEE ALL WORK AND MATERIALS FOR A PERIOD OF ONE YEAR EFFECTIVE THE DATE THE PROJECT IS ACCEPTED BY THE OWNER. ANY IMPERFECT MATERIALS OR WORKMANSHIP SHALL BE REPLACED WITHOUT ADDED COST TO THE PROJECT.
O. IT SHALL NOT BE THE INTENT OF ISSUED PLANS AND/OR SPECIFICATIONS TO SHOW EVERY MINOR DETAIL OF CONSTRUCTION. THE ELECTRICAL CONTRACTOR IS EXPECTED TO FURNISH AND INSTALL ALL NECESSARY ITEMS FOR A COMPLETE AND OPERATING SYSTEM.
P. THE WORD "PROVIDE" MEANS THAT THIS CONTRACTOR SHALL FURNISH, FABRICATE, ERECT, CONNECT, AND COMPLETELY INSTALL SYSTEMS IN PROPER OPERATING CONDITION. ALL LABOR, PRODUCT OPTIONS, ACCESSORIES AND INCIDENTAL MATERIALS REQUIRED SHALL BE INCLUDED AS PART OF THIS WORK TO COMPLETE THE INSTALLATION.
Q. THE WORD "CONNECT" MEANS THAT THIS CONTRACTOR SHALL PROVIDE (SEE DEFINITION ABOVE) ALL DISCONNECTING MEANS, OVERCURRENT PROTECTION AND WIRING REQUIRED TO PLACE THE EQUIPMENT AND SYSTEMS IN PROPER OPERATING CONDITION AND TO COMPLY WITH CODE REQUIREMENTS.
R. CONTRACTOR SHALL COORDINATE THE ROUGH-IN OF ALL OUTLET LOCATIONS WITH ARCHITECTURAL FLOOR PLANS, ELEVATIONS, AND MILLWORK SHOP DRAWINGS PRIOR TO ROUGH-IN.
S. ELECTRICAL CONTRACTOR SHALL NOT SCALE PLANS. CONTRACTOR SHALL REFER TO ARCHITECTURAL PLANS AND ELEVATIONS FOR EXACT LOCATIONS OF ALL EQUIPMENT, UNLESS OTHERWISE NOTED.
T. CONTRACTOR SHALL TEST ALL "LIFE SAFETY" EQUIPMENT AND SYSTEMS FOR PROPER FUNCTION AND OPERATION. UPON SUCCESSFUL COMPLETION OF TESTS, CONFIRMATION SHALL BE SENT TO THE ENGINEER OF RECORD IN THE FORM OF A LETTER STATING THE TESTS PERFORMED, THE RESULTS, AND THE DATE TESTS WERE SUCCESSFULLY COMPLETE. "LIFE SAFETY" EQUIPMENT AND SYSTEMS CONSIST OF THOSE AS SPECIFIED IN THE STATE BUILDING CODE, THE NATIONAL ELECTRICAL CODE (NEC), NFPA 101, AND ANY OTHER LOCAL REQUIREMENTS THAT MAY APPLY.
U. IF DURING THE COURSE OF WORK, THE CONTRACTOR DISCOVERS A PROBLEM WITH THE PERFORMANCE OF THE INSTALLATION RELATIVE TO THE PLANS AND SPECIFICATIONS, THE NEC, OR OTHER CODES OR REQUIREMENTS, THE CONTRACTOR SHALL IMMEDIATELY BRING THE PROBLEM TO THE ATTENTION OF THE ARCHITECT AND/OR ENGINEER FOR RESOLUTION PRIOR TO THE EXECUTION OF THE WORK.
V. WHERE THERE ARE CONFLICTS BETWEEN THE PLANS AND SPECIFICATIONS, THE CONTRACTOR SHALL BRING THE ISSUE TO THE ATTENTION OF THE ENGINEER FOR RESOLUTION PRIOR TO THE EXECUTION OF THE WORK OR ORDERING ANY MATERIALS. NO ADDITIONAL COSTS SHALL BE WARRANTED WITHOUT A CHANGE TO THE PROJECT SCOPE.
W. THE CONTRACTOR SHALL PROVIDE A MINIMUM TWO WEEK NOTICE FOR ANY PLANNED UTILITY OUTAGES. WRITTEN AUTHORIZATION FROM THE OWNER SHALL BE PROVIDED PRIOR TO ANY OUTAGE. ALL PLANNED UTILITY OUTAGES SHALL BE COORDINATED WITH THE OWNER TO OCCUR DURING NON-OPERATING TIMES, INCLUDING NIGHTS, WEEKENDS AND HOLIDAYS. ALL PLANNED UTILITY OUTAGES SHALL INCLUDE PROVISIONS FOR PROPER BACK-UP OF ALL LIFE-SAFETY SYSTEMS AND INCLUDE AN APPROVED FIRE-WATCH PROGRAM AS REQUIRED BY THE LOCAL FIRE MARSHALL.
X. EACH BIDDER SHALL VISIT THE JOB SITE PRIOR TO BIDDING TO FAMILIARIZE THEMSELVES WITH EXISTING CONDITIONS AND TO ASCERTAIN THE EXTENT OF WORK REQUIRED. FAILURE TO VISIT SITE SHALL NOT EXCUSE CONTRACTOR FROM PERFORMING REQUIRED WORK NOR SHALL IT BE AN ACCEPTABLE REASON FOR REQUESTING ADDITIONS TO THE CONTRACT.

2. RACEWAY:

A. CONDUIT SHALL BE MANUFACTURED BY ALLIED, WHEATLAND, REPUBLIC CONDUIT, WESTERN TUBE, OR APPROVED EQUIVALENT.
B. FOR INTERIOR WORK, CONDUIT SHALL BE ZINC COATED EMT EXCEPT WHERE NOT PERMITTED BY CODE. USE SCHEDULE 40 PVC BELOW CONCRETE SLAB, IN DUCTBANKS, AND FOR EXTERIOR WORK WHERE NOT SUBJECT TO DAMAGE. USE IMC WHERE SUBJECT TO PHYSICAL DAMAGE.
C. EMT FITTINGS SHALL BE COMPRESSION GLAND TYPE, OF MALLEABLE STEEL. CONNECTORS SHALL HAVE INSULATED THROATS. CAST, SET SCREW, OR INDENTER TYPE FITTINGS ARE NOT ACCEPTABLE. ALL FITTINGS FOR EMT SHALL BE MADE OF STEEL.
D. ALL RACEWAY SHALL BE RUN CONCEALED, UNLESS OTHERWISE NOTED. FISH ALL NEW OUTLETS IN EXISTING WALLS, WHERE POSSIBLE. ALL RUNS SHALL BE NEAT AND SQUARE.
E. LOW VOLTAGE CABLING NOT SPECIFIED TO BE INSTALLED IN CONDUIT, SHALL BE INSTALLED IN A CABLE TRAY SYSTEM OR J-HOOK SYSTEM CONSISTING OF MINIMUM 2" DIAMETER HOOKS LOCATED ON 3'-0" CENTERS IN ALL ACCESSIBLE CEILINGS. WHERE THERE ARE INACCESSIBLE CEILINGS, PROVIDE CONDUIT FOR ENTIRE LENGTH OF INACCESSIBILITY.
F. RACEWAYS USED FOR LOW VOLTAGE SYSTEMS SUCH AS TELECOMMUNICATIONS, FIRE ALARM, SECURITY, CCTV, CONTROLS, AND SIMILAR CONDUITS ABOVE THE CEILING AND BACKBOARD(S) SHALL BE PROVIDED WITH INSULATED THROAT BUSHINGS AT EACH CONDUIT TERMINATION. THESE BUSHINGS SHALL BE BE INSTALLED PRIOR TO PULLING LOW-VOLTAGE CABLES.
G. RACEWAY PENETRATIONS THROUGH FLOOR SLABS AND FIRE-RATED WALLS SHALL BE FILLED WITH IMPERVIOUS, NON-SHRINK GROUT SUFFICIENTLY TIGHT TO PREVENT THE TRANSFER OF SMOKE, WATER, AND DUST. ROOF PENETRATIONS SHALL BE WITHIN THE EQUIPMENT ROOF CURB.
H. SUPPORT ALL CONDUIT WITH STRAPS AND CLAMPS.
I. ALL CONDUIT SHALL BE RUN PARALLEL OR PERPENDICULAR TO BUILDING LINES, WHETHER EXPOSED OR NOT AND SUPPORTED FROM STRUCTURE AND PROPERLY SECURED.
J. WHERE CONDUITS PASS THROUGH A BUILDING EXPANSION JOINT, PROVIDE GALVANIZED EXPANSION FITTINGS WITH BONDING JUMPERS.
K. MINIMUM CONDUIT SIZE SHALL BE 3/4" FOR INTERIOR WORK, 1" FOR EXTERIOR WORK.
L. PROVIDE MINIMUM 210# TEST NYLON PULL CORD AND NYLON BUSHINGS IN ALL EMPTY RACEWAYS.
M. LIQUID-TIGHT METAL CONDUIT SHALL ONLY BE USED FOR FINAL CONNECTIONS TO EQUIPMENT AND ALL OTHER ROTATING AND VIBRATING EQUIPMENT, MAXIMUM LENGTH OF 3'-0".
N. FLEXIBLE METAL CONDUIT, MINIMUM SIZE 3/8", SHALL ONLY BE USED FOR FINAL CONNECTION TO LIGHTING FIXTURES, MAXIMUM LENGTH OF 6'-0".
O. PROVIDE PULL BOXES, SUCH THAT NO SINGLE CONDUIT RUN HAS BENDS IN EXCESS OF 360°. PULL BOXES SHALL BE SUITABLE AND APPROVED FOR THE INTENDED USE. WHERE CONDUITS PASS UNDER PAVED AREAS, THEY SHALL BE RGS.
P. ALL CONDUIT BENDS/ELBOWS EMERGING FROM UNDERGROUND SHALL BE IMC AND SHALL EXTEND A MINIMUM OF 18" BELOW GRADE.
Q. ALL UNDERGROUND RACEWAYS SHALL BE THOROUGHLY COATED WITH TWO COATS OF ASPHALTUM BITUMASTIC.
R. ALL CONDUITS INSTALLED UNDERGROUND OR IN CONCRETE SHALL HAVE JOINTS MADE WATERTIGHT BY USE OF POLYETRA-FLUOROETHYLENE TAPE.
S. THE USE OF AC OR NM CABLE IS NOT PERMITTED.
T. MC CABLE IS NOT ALLOWED.

3. OUTLET BOXES:

A. JUNCTION AND PULL BOXES SHALL BE CODE GAUGE GALVANIZED STEEL. ACCEPTED MANUFACTURERS SHALL BE STEEL CITY (THOMAS & BETTS), RACO, CROUSE-HINDS, APPLETON (EMERSON), OR APPROVED EQUIVALENT.
B. OUTLET BOXES SHALL NOT BE MOUNTED BACK TO BACK IN COMMON WALLS.
C. ATTACH EMT WITH CONNECTORS HAVING INSULATED THROAT.
D. ATTACH BOXES TO STUD WORK USING CADDY BAR STRAPS THAT CONNECT TO TWO ADJACENT STUDS TO PREVENT TWISTING OF BOX IN WALL.
E. ALL OUTLET BOXES (INCLUDING TELEPHONE, CABLE TV, AND COMPUTER) SHALL HAVE COVER PLATES, BLANK IF NOT USED.
F. ALL EXTERIOR BOXES SHALL BE WATER-TIGHT.

4. CONDUCTORS:

A. CONDUCTORS SHALL BE MANUFACTURED BY SOUTHWIRE (SIMPULL), ENCORE (SUPERSLICK), UNITED COPPER (SLK), CERRO (SLP), OR APPROVED EQUAL, "PRE-LUBRICATED" BY THE MANUFACTURER.
B. ALL CONDUCTORS SHALL BE COPPER, RATED 75° C WET/DRY EXCEPT WHERE OTHERWISE NOTED OR REQUIRED BY U.L. OR OTHER CODES.
C. ALL CONDUCTORS SHALL BE SINGLE INSULATED CONDUCTOR, THHN/THWN-2. SIZES #10 AWG AND SMALLER SHALL BE SOLID, SIZES #8 AWG AND LARGER SHALL BE STRANDED.
D. BRANCH CIRCUITS SHALL NOT BE SMALLER THAN #12 AWG. CONTROL WIRING MAY BE #14 AWG.
E. CONDUCTORS SHALL BE COLOR CODED BLACK/RED/BLUE FOR 120/208 VOLT SYSTEMS AND BROWN/ORANGE/YELLOW FOR 277/480 VOLT SYSTEMS FOR A, B, AND C PHASES, RESPECTIVELY. NEUTRAL SHALL BE WHITE FOR 120/208 VOLT SYSTEMS AND NATURAL GRAY FOR 277/480 VOLT SYSTEMS. GROUND CONDUCTOR SHALL BE GREEN ON ALL SYSTEMS. ALL CONDUCTOR SIZES SHALL HAVE COLOR-CODED INSULATION. THE USE OF COLORED TAPE ON LARGER WIRE SIZES SHALL NOT BE ALLOWED.
F. INSULATION SHALL BE DUAL RATED TYPE THHN/THWN-2 FOR FEEDERS AND BRANCH CIRCUITS. FIXTURE TAPS SHALL BE #12 THHN/THWN-2 IN FLEX WITH GREEN #12 AWG GROUNDING CONDUCTOR.
G. ALL CONDUCTORS SHALL BE IN CONDUIT.
H. WIRING TO LIGHTING FIXTURES SHALL BE AS REQUIRED BY UL LABEL.
I. MULTI-WIRE BRANCH CIRCUITS SHALL NOT BE ALLOWED, UNLESS EXPLICITLY INDICATED ON THE DRAWINGS. WHERE EXPLICITLY INDICATED ON THE DRAWINGS:
   1) ALL 20A MULTI-WIRE RECEPTACLE CIRCUITS SHALL UTILIZE A #10 AWG NEUTRAL CONDUCTOR.
      OR
   2) ONLY WHERE PERMITTED UNDER "RACEWAYS", MC CABLE ASSEMBLIES CAN BE AFC "SUPER NEUTRAL" OR EQUAL, UNLESS OTHERWISE INDICATED ON THE DRAWINGS. WHERE MULTI-WIRE BRANCH CIRCUITS ARE EXPLICITLY INDICATED ON THE DRAWINGS, THEY SHALL BE INSTALLED PER NEC 210.4. MEANS SHALL BE PROVIDED TO SIMULTANEOUSLY DISCONNECT ALL UNGROUNDED CONDUCTORS AT THE POINT WHERE THE BRANCH CIRCUIT ORIGINATES IN ADDITION TO OTHER REQUIREMENTS PER NEC 210.4.
J. JOINTS IN #10 AWG AND SMALLER SHALL BE MADE UP WITH CRIMPED CONNECTORS WITH INSULATING CAPS (NO TAPE) OR WIRENUTS (MAXIMUM OF 3 CONDUCTORS UNDER ANY CONNECTOR OR WIRENUT). LARGER WIRE SHALL USE SPLIT BOLTS OR BOLTED CLAMPS.
K. ALL WIRING LUGS THROUGHOUT THE PROJECT, INCLUDING, BUT NOT LIMITED TO, BREAKERS, PANELBOARD/SWITCHBOARD LUGS, SAFETY SWITCH LUGS, MOTOR STARTER LUGS, TRANSFORMERS LUGS, WIRING DEVICE TERMINALS, AND ALL EQUIPMENT LUGS/TERMINALS SHALL BE RATED FOR USE WITH 75 DEGREE INSULATED CONDUCTORS AT THEIR 75 DEGREE AMPACITY AND SHALL BE SIZED AND SELECTED TO MATCH THE CONDUCTOR SIZE AND MATERIAL.
L. CIRCUIT JOINTS SHALL NOT BE MADE ON DEVICE TERMINALS.
M. WIRE WITHIN PANELBOARDS SHALL BE NEATLY TRAINED, SQUARED, BUNCHED, AND TAGGED.
N. GROUND ALL EQUIPMENT PER NEC ARTICLE 250. BOND WHERE CONDUITS ENTER ENCLOSURES THROUGH CONCENTRIC KNOCKOUTS. ALL FLEX, INCLUDING FIXTURE TAPS, SHALL INCLUDE GREEN GROUNDING CONDUCTOR, #12 AWG MINIMUM. PROVIDE GREEN INSULATED EQUIPMENT GROUNDING CONDUCTOR IN EACH CONDUIT AND FOR EACH CIRCUIT, SIZED PER NEC 250-122.
O. ALL CONDUCTORS INSTALLED IN VERTICAL RACEWAYS SHALL BE SUPPORTED AT INTERVALS AS REQUIRED PER NEC 300-19.
P. THE ELECTRICAL CONTRACTOR SHALL FOLLOW AND APPLY THE TABLE BELOW, REGARDLESS WHAT THE PANEL SCHEDULE INDICATES, FOR SIZING ALL 120V & 277V, 20 AMP BRANCH CIRCUITS (COPPER CONDUCTORS) TO ALLOW A MAXIMUM OF 3% VOLTAGE DROP FROM THE CIRCUIT BREAKER TO THE FIRST DEVICE ON THE BRANCH CIRCUIT AND ACHIEVE A MAXIMUM OF 5% VOLTAGE DROP ACROSS THE ENTIRE BRANCH CIRCUIT:

| VOLTAGE | CONDUCTOR LENGTH * | BRANCH CIRCUIT |
|---|---|---|
| 120 | 0' - 50' | #12 |
| 120 | 51' - 90' | #10 |
| 120 | 91' - 140' | #8 |
| 120 | 141' - 225' | #6 |
| 277 | 0' - 125' | #12 |
| 277 | 126' - 200' | #10 |
| 277 | 201' - 330' | #8 |
| 277 | 331' - 525' | #6 |

* - THE LENGTH IS MEASURED FROM THE CIRCUIT BREAKER TO THE FIRST DEVICE WHICH THE BRANCH CIRCUIT SERVES. WHERE THE DISTANCE EXCEEDS ABOVE, CONSULT WITH THE ENGINEER.

5. WIRING DEVICES:

A. WIRING DEVICES SHALL BE SPECIFICATION GRADE, MINIMUM, EQUAL TO COOPER QUALITY INDICATED BELOW OR AS MANUFACTURED BY HUBBELL, LEGRAND-PASS & SEYMOUR, LEVITON, OR APPROVED EQUAL, UNLESS OTHERWISE NOTED:

SWITCHES (120/277V) SHALL BE AS FOLLOWS:

| | |
|---|---|
| SINGLE-POLE 20 AMP | COOPER AH1221 |
| THREE-WAY 20 AMP | COOPER AH1223 |

DUPLEX RECEPTACLES SHALL HAVE A NYLON FACE AND SHALL BE AS FOLLOWS:

| | |
|---|---|
| 20 AMP DUPLEX | COOPER 5352 |
| 20 AMP DUPLEX GFCI | COOPER SGF20F |

THE PART NUMBERS ABOVE ARE FOR WIRING DEVICE TYPE ONLY. SEE BELOW FOR WIRING DEVICE COLOR AND PLATE MATERIAL/COLOR.

B. SEE MOUNTING HEIGHT ELEVATION DETAIL FOR STANDARD MOUNTING HEIGHTS OF ALL DEVICES, UNLESS OTHERWISE NOTED.
C. ALL WIRING DEVICES (SWITCHES AND RECEPTACLES) AND PLATES SHALL MATCH EXISTING IN MATERIAL AND COLOR, UNLESS OTHERWISE NOTED. COVER PLATES IN MASONRY WALLS SHALL BE JUMBO SIZE.
D. ALL WIRING DEVICES FED FROM THE EMERGENCY POWER SYSTEM SHALL BE RED.
E. EACH DUPLEX RECEPTACLE INDICATED TO BE ON A DEDICATED CIRCUIT SHALL BE 20 AMP TYPE.
F. ADJACENT DEVICES SHALL HAVE A COMMON WALL PLATE.
G. WEATHERPROOF COVERS SHALL BE "WHILE-IN-USE" SO PLUGS MAY BE INSTALLED WITHOUT COMPROMISING THE WP FUNCTION. COOPER #WIU-2 DOUBLE-GANG WITH CLEAR COVER OR APPROVED EQUAL.
H. A MAXIMUM OF 10 GENERAL PURPOSE RECEPTACLES SHALL BE ON EACH BRANCH CIRCUIT.
I. GROUND-FAULT CIRCUIT-INTERRUPTER (GFCI) PROTECTION FOR PERSONNEL SHALL BE PROVIDED FOR ALL LOCATIONS PER NEC 210.8, INSTALLED IN A READILY ACCESSIBLE LOCATION. WHERE A DEVICE LOCATION IS NOT ACCESSIBLE, THE GFCI PROTECTION SHALL BE PROVIDED WITH THE BREAKER SERVING THE DEVICE.
J. ALL GFCI RECEPTACLES SHALL HAVE AUTO-MONITORING / SELF-TEST FUNCTION AND REVERSE LINE-LOAD MISFIRE FUNCTION AND MEET ALL REQUIREMENTS OF UL 943 (LATEST EDITION).

6. SUPPORTS:

A. ALL EQUIPMENT SHALL BE ADEQUATELY SUPPORTED FROM STRUCTURE.
B. INSERTS IN MASONRY SHALL BE LEAD OR FIBER IN DRILLED HOLES, OR CAST IN PLACE.
C. NAILS OR POWDER ACTUATED FASTENERS SHALL NOT BE USED.
D. EMT/IMC/RGS SUPPORTS SHALL BE A MAXIMUM OF 8'-0" APART AND A MAXIMUM OF 3'-0" FROM BOXES.
E. LIGHTING FIXTURES MOUNTED IN OR ON CEILING SHALL BE SUPPORTED FROM STRUCTURE VIA 12 GAUGE STEEL WIRE. PROVIDE A MINIMUM OF FOUR WIRES, ONE ATTACHED TO EACH CORNER OF LAY-IN FIXTURES.

7. PAINTING:

A. SUITABLE FINISH COAT SHALL BE PROVIDED FOR ALL EQUIPMENT. PANEL TUBS, COVERS, ETC. SHALL BE PRIMED AND ENAMELED TO BLEND WITH ADJACENT SURFACES, OR SHALL BE MANUFACTURER'S STANDARD COLOR BAKED ENAMEL FINISH, OR AS DIRECTED BY THE ARCHITECT.
B. CONTRACTOR TO PAINT WHERE EXISTING EXPOSED PANELBOARDS, SURFACE RACEWAY, SURFACE BOXES, ETC. HAVE BEEN REMOVED DURING THE DEMOLITION PHASE, EITHER FOR TEMPORARY WORK OR PERMANENTLY.

8. LIGHTING FIXTURES:

A. TYPES AND MANUFACTURERS ARE SCHEDULED ON THE PLANS. EQUIVALENT FIXTURES BY OTHERS MAY BE SUBMITTED ONLY AS INDICATED ON THE PLANS AND ARE SUBJECT TO THE APPROVAL OF THE OWNER AND ENGINEER.
B. ALL FIXTURES SHALL BE U.L. LISTED AND LABELED.
C. LAMPS SHALL BE GENERAL ELECTRIC, PHILIPS, OR OSRAM/SYLVANIA EXCEPT WHERE OTHERWISE NOTED IN THE LIGHTING FIXTURE SCHEDULE OR OTHERWISE NOTED. ALL FIXTURES SHALL BE EQUIPPED WITH LAMPS.
D. BALLASTS SHALL BE AS INDICATED IN THE LIGHTING FIXTURE SCHEDULE OR AS OTHERWISE NOTED.
E. ALL FIXTURES SHALL BE PROVIDED FOR PROPER VOLTAGE BASED ON THE CIRCUIT ASSIGNMENT INDICATED ON THE PLANS.
F. CATALOG NUMBERS ARE FOR GENERAL IDENTIFICATION OF FIXTURES ONLY. ALL RELATED PARTS, SUCH AS PLASTER RINGS, JUNCTION BOXES, LOUVERS, SHIELDS, MOUNTING STEMS, CANOPIES, CONNECTORS, STRAPS, NIPPLES, HARDWARE, ACCESSORIES, ETC., TO FIT THEM PROPERLY TO THE CONSTRUCTION, SHALL BE FURNISHED AND INSTALLED BY THIS CONTRACTOR. CONTRACTOR SHALL PROVIDE SUITABLE TRIM AND APPURTENANCES TO MOUNT FIXTURES IN TYPE OF CEILING OR WALL AS SPECIFIED IN ARCHITECTURAL FINISH SCHEDULES REGARDLESS OF CATALOG NUMBER GIVEN.
G. ALL FIXTURES SHALL BE GROUNDED PER THE NEC.
H. FIXTURES SHALL BE CONNECTED WITH FLEX TO THE RIGID RACEWAY PORTION OF THE WIRING SYSTEM SHALL CARRY A GREEN BONDING JUMPER WITHIN THE FLEX. THE JUMPER SHALL BE FASTENED TO BOTH THE FIXTURE AND THE RACEWAY SYSTEM WITH A STEEL CITY "G" CLIP OR APPROVED EQUIVALENT. PHASE AND GROUND CONDUCTORS RUN IN FLEX SHALL BE #12 AWG WITH LENGTH SHALL BE 6'-0".
I. MOUNT ALL FIXTURES PLUMB AND SQUARE WITH ROWS ALIGNED.
J. FLUORESCENT LUMINAIRES THAT UTILIZE DOUBLE-ENDED LAMPS AND CONTAIN BALLAST(S) THAT CAN BE SERVICED IN PLACE SHALL HAVE A DISCONNECTING MEANS WITHER INTEGRAL OR LATCH TYPE HOLDERS IN EACH LUMINAIRE PER NEC 410.130(G).
K. SEE ARCHITECTURAL REFLECTED CEILING PLANS FOR EXACT LOCATION OF FIXTURES.
L. CONTRACTOR SHALL COORDINATE FIXTURE TYPE AND TRIM WITH CEILING CONSTRUCTION AND ADJUST ACCORDINGLY WITHOUT ADDITIONAL EXPENSE.
M. ALL LIGHTING FIXTURES SHALL BE THERMALLY PROTECTED PER THE NEC.

10. EQUIPMENT IDENTIFICATION:

A. PROVIDE ENGRAVED PHENOLIC NAMEPLATES FOR ALL ELECTRICAL EQUIPMENT SUPPLIED FOR THE PROJECT, INCLUDING BUT NOT LIMITED TO, WIRING TROUGHS, SAFETY SWITCHES, DISCONNECTS, ETC. NAMEPLATE SHALL INDICATE THE DEVICE NAME, SYSTEM VOLTAGE (VOLTAGE/PHASE/WIRE), AND UPSTREAM DEVICE AND CIRCUIT. PROVIDE NAMEPLATES FOR CIRCUIT BREAKERS IN SWITCHGEARS, SWITCHBOARDS AND DISTRIBUTION PANELS.
B. NAMEPLATE COLORS SHALL BE AS FOLLOWS:

| | |
|---|---|
| 120/208V EQUIPMENT | BLUE SURFACE WITH WHITE CORE |
| 277/480V EQUIPMENT | BLACK SURFACE WITH WHITE CORE |
| EMERGENCY SYSTEMS | GREEN SURFACE WITH WHITE CORE |
| FIRE ALARM SYSTEM | BRIGHT RED SURFACE WITH WHITE CORE |
| TELEPHONE SYSTEMS | ORANGE SURFACE WITH WHITE CORE |
| DATA SYSTEMS | BROWN SURFACE WITH WHITE CORE |

C. NAMEPLATES UP TO 8 SQUARE INCHES SHALL NOT BE LESS THAN 1/16" THICK. NAMEPLATES LARGER THAN 8 SQUARE INCHES SHALL NOT LESS THAN 1/8" THICK.
D. LETTERING HEIGHT SHALL BE 1/2" MINIMUM.
E. NAMEPLATES SHALL BE ATTACHED WITH SELF-DRILLING/SELF-TAPPING SCREWS, EXCEPT RIVETS SHALL BE USED WHERE END OF SCREW IS NOT PROTECTED. QUANTITY AS FOLLOWS:

| | |
|---|---|
| UP TO 5 SQUARE INCHES: | 2 SCREWS. |
| 5 TO 12 SQUARE INCHES: | 4 SCREWS. |
| ABOVE 12 SQUARE INCHES: | 6 SCREWS. |

12. DISCONNECTS:

A. DISCONNECT SWITCHES SHALL BE HEAVY-DUTY TYPE IN NEMA 1 ENCLOSURES, UNLESS OTHERWISE NOTED, FUSED OR NON-FUSED AS INDICATED. SWITCHES SHALL HAVE REJECTION-TYPE FUSE CLIPS. SWITCHES SHALL BE BY EATON, SQUARE-D, GENERAL ELECTRIC, OR APPROVED EQUAL. WHERE FED FROM A LOAD CENTER, GENERAL-DUTY SWITCHES SHALL BE PERMITTED.
B. FUSES LESS THAN 60A SHALL BE CLASS RK5, DUAL-ELEMENT, TIME-DELAY WITH INDICATION
C. FUSES GREATER THAN 60A SHALL BE CLASS J, DUAL-ELEMENT, TIME-DELAY WITH INDICATION.
D. A SET OF 1 SPARE FUSES OF EACH SIZE AND TYPE SHALL BE FURNISHED TO THE OWNER

15. FIRE ALARM SYSTEM:

A. NEW DEVICES SHALL BE CONNECTED TO THE EXISTING FIRE ALARM SYSTEM IN COMPLIANCE WITH ALL APPLICABLE NFPA 72 AND OTHER STANDARDS AS WELL AS THE AMERICAN'S WITH DISABILITIES ACT (ADA). ALL FINAL CONNECTIONS, TESTING AND ADJUSTMENTS SHALL BE PERFORMED BY OR UNDER DIRECT SUPERVISION OF AN AUTHORIZED FACTORY REPRESENTATIVE. NEW DEVICES SHALL BE COMPATIBLE WITH THE EXISTING FIRE ALARM SYSTEM. THE CONTRACTOR SHALL FIELD VERIFY EXACT SYSTEM MANUFACTURER AND TYPE AND CAPABILITY TO MEET THE INTENT INDICATED ON THE DRAWINGS.
B. INITIATING DEVICE ACTIVATION SHALL CAUSE OPERATION OF THE PROPER ALARM CIRCUIT IN THE CONTROL PANEL, AND OPERATE ALL AUDIBLE AND VISUAL INDICATING ALARMS. ALL AIR HANDLING UNITS SHALL BE STOPPED UPON ANY ALARM INPUT. EACH AIR HANDLER UNIT SHALL BE PROVIDED WITH A SYSTEM CONTROLLED RELAY TO EFFECT SHUTDOWN. ALL ALARM DEVICES AND LAMPS SHALL CONTINUE TO OPERATE UNTIL THE INITIATING DEVICE IS RESET. SUBSEQUENT ALARMS SHALL RESOUND THE SYSTEM. AN AUDIBLE AND VISUAL SIGNAL SHALL INDICATE SYSTEM TROUBLE. THE CONTROL PANEL SHALL PROVIDE FOR ACTIVATING A UL LISTED CENTRAL STATION SIGNAL FOR NOTIFYING THE FIRE DEPARTMENT.
C. MANUAL STATIONS SHALL BE NON-CODED, WITH DUAL-ACTION PULL AND KEY TYPE RESET, SEMI-FLUSH MOUNTED. COMBINATION LIGHT AND HORN SIGNALS SHALL BE FLUSH MOUNTED. WIRING SHALL BE IN CONDUIT AS PREVIOUSLY SPECIFIED, #14 AWG MINIMUM, THHN. ALL J-BOXES USED FOR THE FIRE ALARM SYSTEM SHALL BE PAINTED RED.
D. CONDUCTORS SHALL BE PLENUM-RATED AND INSTALLED IN CONDUIT AND INSTALLED IN COMPLIANCE WITH NFPA 70, ARTICLE 760; IN ADDITION TO WIRING METHODS 300.4.
E. ALL FIRE ALARM WIRING CLASS SHALL MATCH EXISTING INSTALLATION.
F. PROVIDE ALL REQUIRED MODULES, POWER EXTENDERS, PROGRAMMING, ETC. FOR A COMPLETE AND OPERATIONAL SYSTEM.
G. SUBMIT FIRE ALARM SHOP DRAWINGS CONSISTING OF PRODUCT DATA, TO THE ENGINEER AND FOR APPROVAL.
H. FILL OUT NFPA 72 CERTIFICATION REPORT AND SUBMIT TO ENGINEER AND AUTHORITY HAVING JURISDICTION.
I. WARRANTY - ALL WORK PERFORMED AND ALL MATERIALS AND EQUIPMENT FURNISHED UNDER THIS CONTRACT SHALL BE FREE FROM DEFECTS AND SHALL REMAIN SO FOR A PERIOD OF AT LEAST TWO (2) YEARS FROM THE DATE OF ACCEPTANCE BY THE PROFESSIONAL ENGINEER AND/OR OWNER. THE FULL COST OF MAINTENANCE, LABOR, AND MATERIALS REQUIRED TO CORRECT ANY DEFECT DURING THIS TWO YEAR PERIOD SHALL BE IMMEDIATELY CORRECTED AT NO ADDITIONAL COST TO THE OWNER. ANY DEFECTS THAT RENDER THE SYSTEM INOPERATIVE SHALL BE REPAIRED WITHIN 24 HOURS OF THE OWNER NOTIFYING THE CONTRACTOR. OTHER DEFECTS SHALL BE REPAIRED WITHIN 48 HOURS OF THE OWNER NOTIFYING THE CONTRACTOR.
J. PROVIDE ALL REPROGRAMMING AND/OR REWORK AND/OR REPLACEMENT OF EXISTING FIRE ALARM PANEL AS REQUI

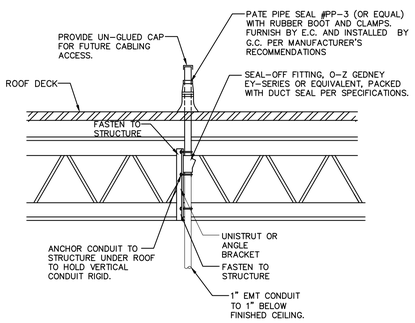


## 1 ROOF PENETRATION DIAGRAM
NO SCALE

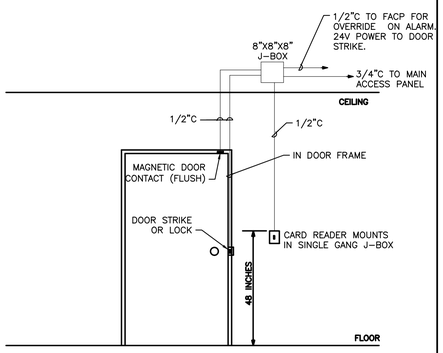


## 2 CARD READER/DOOR LOCK
NO SCALE

U.L. SYSTEM NO. WJ8007

### MULTIPLE PENETRATING ITEMS THROUGH CONCRETE FLOOR OR WALL

F RATING = 4-HR.
T RATING = 0-HR.

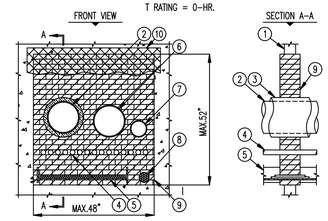


1. CONCRETE FLOOR OR WALL ASSEMBLY (MINIMUM 4-1/2" THICK).
2. MAXIMUM 12" DIAMETER STEEL PIPE OR MAXIMUM 6" DIAMETER COPPER PIPE.
3. MAXIMUM 1-1/2" THICK GLASS-FIBER PIPE INSULATION.
4. 1-1/2" DIAMETER STEEL CONDUIT (MAXIMUM QUANTITY = 15).
5. STEEL OR ALUMINUM CABLE TRAY (MAXIMUM SIZE : 36" x 6") WITH ANY OF THE FOLLOWING TYPES OF CABLE MAY BE USED WITH MAXIMUM 30% FILL OF CABLE TRAY :
   A. MAXIMUM 500 KCMIL SINGLE CONDUCTOR POWER CABLE.
   B. MAXIMUM 7/C NO. 12 AWG COPPER CONDUCTOR CABLE.
   C. MAXIMUM 300 PAIR NO. 24 AWG TELEPHONE CABLES.
6. MAXIMUM 30" DIAMETER STEEL PIPE (12" DIAMETER PIPE SHOWN).
7. 6" DIAMETER STEEL PIPE.
8. MAXIMUM 4" DIAMETER CABLE BUNDLE TO INCLUDE ANY OF THE FOLLOWING :
   A. FIBER-OPTIC CABLE (MAX. 1/2" DIA).
   B. ROMEX (2/C NO. 10 +GROUND).
   C. 25 PAIR NO. 24 AWG TELEPHONE CABLES.
   D. 7/C NO. 12 AWG CABLES.
   E. RG 62A COAXIAL CABLES.
   F. METAL CLAD CABLE (MAX. 3/4" DIA.).
9. HILTI FS 657 INTUMESCENT FIRESTOP BLOCK (2" TALL x 5" WIDE x 8" DEEP, REF: FRONT VIEW).
10. SEE NOTE NO. 4 BELOW.

NOTES : 1. ANNULAR SPACING FOR CABLE TRAY = MINIMUM 1-1/2".
2. ANNULAR SPACING FOR PIPE AND CABLE PENETRATIONS = MINIMUM 1".
3. INSTALL HILTI FS-ONE HIGH PERFORMANCE INTUMESCENT FIRESTOP SEALANT IN ANY VOID THAT MAY EXIST (AROUND CABLE TRAY, CABLES, OR PIPE PENETRATIONS).
4. IF THE ANNULAR SPACE IS GREATER THAN 5", PROVIDE A STEEL WIRE MESH (NOMINAL 2" SQUARES, NO. 16 SWG). INSTALL ON EACH SIDE OF WALL ASSEMBLY.
5. MAXIMUM AREA OF OPENING = 2496 SQUARE INCHES.

SEE HILTI FIRESTOP INSTALLATION MANUAL FOR ADDITIONAL INSTRUCTIONS
HILTI, INC. TULSA, OK 1-800-879-8000

U.L. SYSTEM NO. WL8013

### MULTIPLE PENETRATIONS THROUGH 1-HR. OR 2-HR. GYPSUM WALL

F RATING = 1-HR. OR 2-HR.
T RATING = 0-HR.
L RATING AT AMBIENT = 5 CFM/SQ. FT.
L RATING AT 400°F = 2 CFM/SQ. FT.

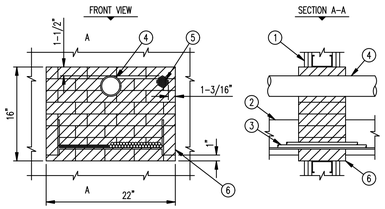


1. GYPSUM WALL ASSEMBLY (1-HR. OR 2-HR. FIRE-RATING)(2-HR. SHOWN).
2. STEEL OR ALUMINUM CABLE TRAY (MAXIMUM SIZE : 18" x 6").
3. ANY OF THE FOLLOWING TYPES OF CABLE MAY BE USED WITH MAX. 30% FILL ON CABLE TRAY :
   A. 500 KCMIL SINGLE CONDUCTOR POWER CABLE.
   B. 7/C NO. 12 AWG COPPER CONDUCTOR CABLE.
   C. 300 PAIR NO. 24 AWG TELEPHONE CABLE.
4. MAXIMUM 3" DIAMETER PVC PLASTIC PIPE (SCHEDULE 40)(CLOSED OR VENTED PIPING SYSTEM).
5. CABLE BUNDLE (MAX. 2" DIA.) TO CONSIST OF ANY OF THE FOLLOWING:
   A. FIBER-OPTIC CABLE.
   B. RG 59 COAXIAL CABLE.
   C. 25 PAIR NO. 24 AWG TELEPHONE CABLE.
   D. 7/C NO. 12 AWG COPPER CONDUCTOR.
6. HILTI FS 657 FIRESTOP BLOCKS (2" x 5" x 8" DEEP, REF: FRONT VIEW).

NOTES : 1. NOT SHOWN: PENETRATING ITEMS MAY ALSO INCLUDE A MAX. 4" DIA. STEEL OR COPPER PIPE, EMT, OR STEEL CONDUIT WITH A MAX. 1-1/2" GLASS-FIBER PIPE INSULATION OR NON-INSULATED MAX. 4" STEEL PIPE, EMT, OR CONDUIT.
2. ANNULAR SPACE = MINIMUM 1".
3. INSTALL HILTI FS-ONE HIGH PERFORMANCE INTUMESCENT FIRESTOP SEALANT IN ANY VOID THAT MAY EXIST (AROUND PENETRATING ITEMS, OR BETWEEN BLOCKS).

SEE HILTI FIRESTOP INSTALLATION MANUAL FOR ADDITIONAL INSTRUCTIONS
HILTI, INC. TULSA, OK 1-800-879-8000

U.L. SYSTEM NO. WL3065

### CABLE BUNDLE THROUGH 1-HR. OR 2-HR. FIRE-RATED GYPSUM WALL

F RATING = 1-HR. OR 2-HR.
T RATING = 0-HR.
L RATING AT AMBIENT = 5 CFM/SQ. FT.
L RATING AT 400°F = 2 CFM/SQ. FT.

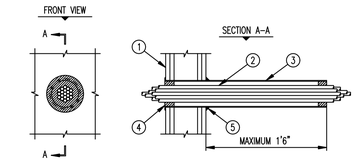


1. GYPSUM WALL ASSEMBLY (1-HR. OR 2-HR. FIRE-RATING)(2-HR. SHOWN).
2. CABLE BUNDLE TO CONSIST OF ANY OF THE FOLLOWING :
   A. 7/C NO. 12 AWG CAGLES.
   B. 12 PAIR 24 AWG PHONE CABLES.
   C. 25 PAIR 24 AWG PHONE CABLES.
   D. RG 59 COAXIAL CABLES.
   E. 2/C (+GND) NO. 14 AWG METAL-CLAD CABLES.
   F. 2/C NO. 8 AWG METAL-CLAD CABLES.
   G. MAXIMUM 1/2" DIAMETER FIBER-OPTIC CABLES.
3. OPTIONAL : MAX. 4" NOM. DIA. STEEL PIPE SLEEVE (SCH. 40 OR THINNER)(SEE NOTE NO. 4).
4. HILTI FS-ONE HIGH PERFORMANCE INTUMESCENT FIRESTOP SEALANT :
   A. MINIMUM 5/8" DEPTH OF SEALANT FOR A 1-HR. FIRE-RATING.
   B. MINIMUM 1-1/4" DEPTH OF SEALANT FOR A 2-HR. FIRE-RATING.
5. SEE NOTE NO. 4 BELOW.

NOTES : 1. MAXIMUM DIAMETER OF OPENING = 4-1/2".
2. CABLES TO FILL MAXIMUM 33% OF AREA OF OPENING.
3. ANNULAR SPACE = MINIMUM 1/4", MAXIMUM 3/4".
4. STEEL SLEEVE MAY BE FLUISH WITH WALL SURFACE OR EXTEND UP TO 18" BEYOND WALL SURFACE IN ANY COMBINATION. WHEN SLEEVE IS FLUSH WITH WALL, APPLY HILTI FS-ONE FIRESTOP SEALANT ONTO WALL SURFACE. WHEN SLEEVE IS EX-TENDED BEYOND ONE OR BOTH SIDES OF WALL, APPLY 1/2" CROWN HILTI FS-ONE FIRESTOP SEALANT TO WALL/SLEEVE INTERFACE.

SEE HILTI FIRESTOP INSTALLATION MANUAL FOR ADDITIONAL INSTRUCTIONS
HILTI, INC. TULSA, OK 1-800-879-8000

U.L. SYSTEM NO. WL1054

### METAL PIPE THROUGH GYPSUM WALL ASSEMBLY

F RATING = 1-HR. OR 2-HR.
T RATING = 0-HR.
L RATING AT AMBIENT = LESS THAN 1 CFM/SQ. FT.
L RATING AT 400°F = LESS THAN 4 CFM/SQ. FT.

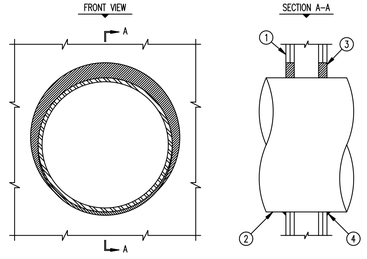


1. GYPSUM WALL ASSEMBLY (1-HR. OR 2-HR. FIRE-RATING)(2-HR. SHOWN).
2. PENETRATING ITEM TO BE ONE OF THE FOLLOWING :
   A. MAXIMUM 30" DIAMETER STEEL PIPE (SCHEDULE 10 OR HEAVIER).
   B. MAXIMUM 6" DIAMETER COPPER PIPE.
   C. MAXIMUM 6" DIAMETER STEEL CONDUIT.
   D. MAXIMUM 4" DIAMETER STEEL EMT.
3. HILTI FS-ONE HIGH PERFORMANCE INTUMESCENT FIRESTOP SEALANT :
   A. MINIMUM 5/8" DEPTH OF SEALANT FOR A 1-HR. FIRE-RATING.
   B. MINIMUM 1-1/4" DEPTH OF SEALANT FOR A 2-HR. FIRE-RATING.
4. MINIMUM 1/2" BEAD HILTI FS-ONE HIGH PERFORMANCE INTUMESCENT FIRESTOP SEALANT AT POINT OF CONTACT.

NOTES : 1. MAXIMUM DIAMETER OF OPENING = 32-1/4".
2. ANNULAR SPACE = MINIMUM 0", MAXIMUM 2-1/4".

SEE HILTI FIRESTOP INSTALLATION MANUAL FOR ADDITIONAL INSTRUCTIONS
HILTI, INC. TULSA, OK 1-800-879-8000

U.L. SYSTEM NO. WL1085

### EMT THROUGH 1-HR. OR 2-HR. GYPSUM WALL ASSEMBLY

F RATING = 1-HR. AND 2-HR.
T RATING = 0-HR.
L RATING AT AMBIENT = LESS THAN 1 CFM/SQ. FT.
L RATING AT 400°F = 4 CFM/SQ. FT.

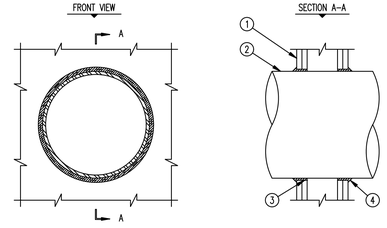


1. GYPSUM WALL ASSEMBLY (1-HR. OR 2-HR. FIRE-RATING)(2-HR. SHOWN).
2. PENETRATING ITEM TO BE ONE OF THE FOLLOWING :
   A. MAXIMUM 12" DIAMETER STEEL PIPE (SCHEDULE 20 OR HEAVIER).
   B. MAXIMUM 12" DIAMETER CAST IRON PIPE.
   C. MAXIMUM 6" DIAMETER COPPER PIPE.
   D. MAXIMUM 6" DIAMETER EMT.
   E. MAXIMUM 6" DIAMETER STEEL CONDUIT.
3. HILTI FS-ONE HIGH PERFORMANCE INTUMESCENT FIRESTOP SEALANT FORCED INTO ANNULAR SPACE TO MAXIMUM EXTENT.
4. MINIMUM 1/2" BEAD HILTI FS-ONE HIGH PERFORMANCE INTUMESCENT FIRESTOP SEALANT AT PIPE/GYPSUM WALLBOARD INTERFACE.

NOTE : ANNULAR SPACE = MINIMUM 0", MAXIMUM 1/4".

SEE HILTI FIRESTOP INSTALLATION MANUAL FOR ADDITIONAL INSTRUCTIONS
HILTI, INC. TULSA, OK 1-800-879-8000

U.L. SYSTEM NO. WL8004

### MULTIPLE METAL PIPE AND CABLE THROUGH 2-HR. GYPSUM WALL

F RATING = 2-HR.
T RATING = 1/4-HR.
L RATING AT AMBIENT = LESS THAN 1 CFM/SQ. FT.
L RATING AT 400°F = 4 CFM/SQ. FT.

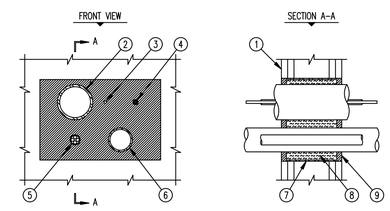


1. GYPSUM WALL ASSEMBLY (2-HR. FIRE-RATING).
2. MAXIMUM 3" DIAMETER ELECTRICAL METALLIC TUBING (EMT).
3. MAXIMUM 25 PAIR NO. 24 AWG (OR SMALLER) TELEPHONE CABLES.
4. MAXIMUM 3/C NO. 10 AWG NM (WITH GROUND) POWER CABLE WITH PVC INSULATION.
5. MAXIMUM 300 KCMIL (OR SMALLER) POWER CABLE WITH PVC INSULATION & NYLON JACKET.
6. MAXIMUM 2" DIAMETER STEEL PIPE, COPPER PIPE, EMT, OR STEEL CONDUIT.
7. NO. 8 STEEL WIRE MESH, 4-3/4" LONG (OR STANDARD METAL DRYWALL TRACK SCREWED SECURELY IN PLACE) CENTERED IN OPENING.
8. MINIMUM 4" THICKNESS MINERAL WOOL (MIN. 4 PCF DENSITY) TIGHTLY PACKED.
9. MIN. 1/2" DEPTH HILTI FS-ONE HIGH PERFORMANCE INTUMESCENT FIRESTOP SEALANT.

NOTES : 1. MAXIMUM AREA OF OPENING = 96 SQUARE INCHES WITH A MAX. DIM. OF 12".
2. DISTANCE BETWEEN ITEMS = MINIMUM 1-3/4", MAXIMUM 7".
3. DISTANCE FROM EDGE OF OPENING = MINIMUM 1/2", MAXIMUM 7". (EXCEPTION: 300 KCMIL POWER CABLE MUST BE MINIMUM 1-1/2" FROM EDGE OF OPENING.

SEE HILTI FIRESTOP INSTALLATION MANUAL FOR ADDITIONAL INSTRUCTIONS
HILTI, INC. TULSA, OK 1-800-879-8000

## GENERAL NOTES

ALL NOTES APPLY TO ALL DRAWINGS AND ALL TRADES. IT IS THE RESPONSIBILITY OF ALL CONTRACTORS AND TRADES TO COORDINATE THE INSTALLATION OF THEIR WORK WITH THE INSTALLATION OF WORK BY ALL OTHER CONTRACTORS AND TRADES. THE REQUIREMENTS OF THE DRAWINGS, GENERAL REQUIREMENTS AND ALL ITEMS OF THE CONTRACT DOCUMENTS ARE EQUALLY BINDING ON ALL CONTRACTORS AND TRADES. EACH CONTRACTOR IS REQUIRED TO MAINTAIN FULL SETS OF THE CONTRACT DOCUMENTS FOR HIS EMPLOYEES USE ON THE PROJECT TO ASSURE THAT ALL WORK IS PROPERLY COORDINATED AND INSTALLED WITH THE WORK OF OTHER CONTRACTORS AND TRADES.

WHENEVER THERE ARE DISCREPANCIES BETWEEN DRAWINGS, OR BETWEEN THE DRAWINGS AND SPECIFICATIONS, OR CONFLICTS WITHIN THE SPECIFICATIONS AND/OR DRAWINGS, AND SUCH DISCREPANCY IS NOT CALLED TO THE ARCHITECT'S ATTENTION IN TIME TO PERMIT CLARIFICATION BY ADDENDUM, THE CONTRACTOR SHALL BASE HIS BID UPON PROVIDING THE BETTER QUALITY OR GREATER OF WORK OR MATERIAL CALLED FOR, SHALL SUBMIT A WRITTEN STATEMENT WITH HIS PROPOSAL NOTING SUCH DISCREPANCIES, AND SHALL SO FURNISH AND INSTALL SUCH BETTER QUALITY OR GREATER QUANTITY UNLESS OTHERWISE ORDERED IN WRITING.

Project No.
1667

Date:
11/12/2020
Drawn by:
MCH
Checked by:
MKG
Revisions

© STEWART-COOPER-NEWELL ARCHITECTS, P.A.

THIS DRAWING IS THE PROPERTY OF STEWART-COOPER-NEWELL ARCHITECTS, P.A. UNDER THE COPYRIGHT LAWS OF THE UNITED STATES. THIS DRAWING MAY NOT BE REPRODUCED, PUBLISHED OR USED IN ANY WAY WITHOUT THE WRITTEN PERMISSION OF STEWART-COOPER-NEWELL ARCHITECTS, P.A.

optima engineering
150 Fayetteville St., Suite 520, Raleigh, NC 27601
1027 South Tryon St., Suite 300, Charlotte NC 28203
Phone: 919-926-2200 • www.optimaengineering.com
North Carolina License Number C-0814

Stewart-Cooper-Newell Architects
719 East Second Avenue
Gastonia, NC 28054
Phone: 704.865.6311
Fax: 704.865.0046
1.800.671.0621
www.scn-architects.com

NORTH CAROLINA PROFESSIONAL SEAL 042210 ARCHITECT MARK K. GUNN
11/12/2020

BAY EXPANSION FOR
GREENVILLE FIRE RESCUE #1
GREENVILLE, NC

WALL PENETRATION DETAILS

Sheet No.
10.02

THIS DRAWING IS AN INSTRUMENT OF SERVICE. THE DRAWING AND THE INFORMATION THEREON IS THE PROPERTY OF OPTIMA ENGINEERING, P.A. ANY REPRODUCTION, ALTERATION, OR USE FOR OTHER THAN THE INTENDED PROJECT, WITHOUT THE WRITTEN CONSENT OF OPTIMA ENGINEERING, P.A. IS EXPRESSLY FORBIDDEN. COPYRIGHT © OPTIMA ENGINEERING P.A. 2020, ALL RIGHTS RESERVED.

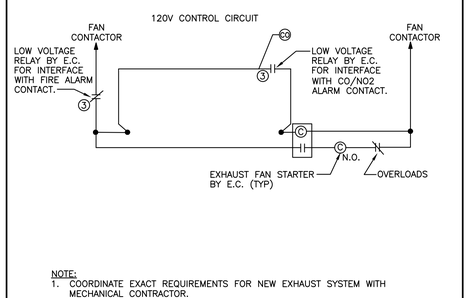


NOTE:
1. COORDINATE EXACT REQUIREMENTS FOR NEW EXHAUST SYSTEM WITH MECHANICAL CONTRACTOR.

## 4 EXHAUST SYSTEM SCHEMATIC
NO SCALE

NOTES:
1. E.C. AND G.C. SHALL COORDINATE ALL ITEMS WITH OWNER AND DOOR PROVIDER PRIOR TO DOOR INSTALLATION.
2. E.C. TO REVIEW OVERHEAD DOOR SPECIFICATIONS FOR ALL ELECTRICAL AND OTHER ITEMS RELATED TO THE OPERATIONS OF THE DOOR & ACCESSORIES.

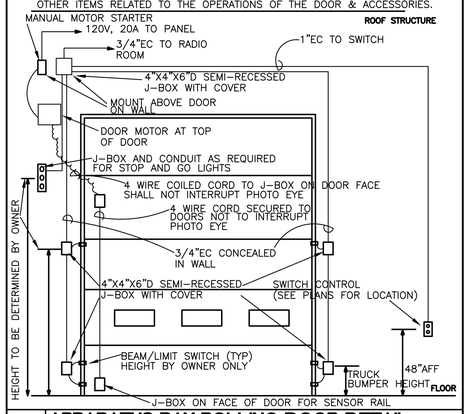


## 3 APPARATUS BAY ROLLING DOOR DETAIL
NO SCALE

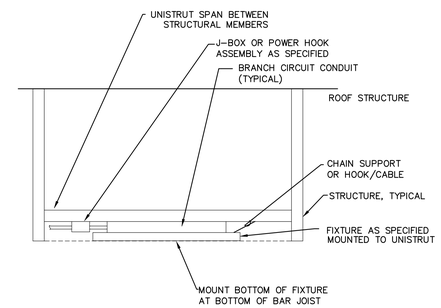


NOTES:
1. ORIENTATION SHOWN IS FOR PERPENDICULAR TO FLOOR APPLICATIONS. FOR SLOPED JOIST INSTALLATION, MATCH SLOPE OF JOIST AND MOUNT FLUSH WITH JOIST. ADJUST UNISTRUT AS REQUIRED.

## 2 HI-BAY FIXTURE (2X4)
NO SCALE

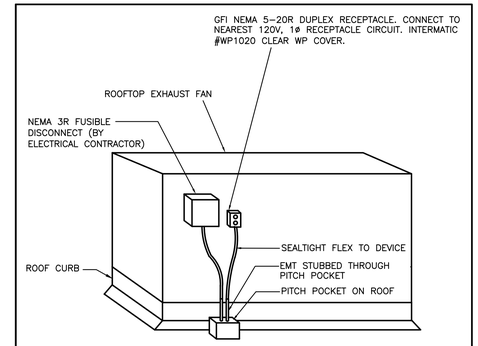


NOTE: TYPICAL FOR ALL ROOF MOUNTED HVAC EQUIPMENT.

## 1 ROOFTOP RECEPTACLE DETAIL
NO SCALE

## FIRE ALARM SYSTEM MATRIX

| | BUILDING SYSTEM OUTPUTS | | | | | | | | | | | | | | | | CENTRAL COMM | | | | |
|---|---|---|---|---|---|---|---|---|---|---|---|---|---|---|---|---|---|---|---|---|---|
| | ACTIVATE COMMON ALARM SIGNAL INDICATOR | ACTIVATE AUDIBLE ALARM SIGNAL | ACTIVATE COMMON SUPERVISORY SIGNAL INDICATOR | ACTIVATE AUDIBLE SUPERVISORY SIGNAL | ACTIVATE COMMON TROUBLE SIGNAL INDICATOR | ACTIVATE AUDIBLE TROUBLE SIGNAL | ACTIVATE GENERAL EVACUATION SIGNAL | DISPLAY CHANGE OF STATUS | ACTIVATE EXTERNAL FIRE ALARM SIGNAL | TRANSMIT FIRE ALARM SIGNAL TO CENTRAL STATION | TRANSMIT SUPERVISORY SIGNAL TO CENTRAL STATION | TRANSMIT TROUBLE SIGNAL TO CENTRAL STATION | RETURN ELEVATOR TO ALTERNATE FLOOR | RETURN ELEVATOR TO FIRST FLOOR | SHUT DOWN RESPECTIVE HVAC | SHUT DOWN ELEVATOR AFTER ELEV. REACHES DESIGNATED FLOOR | SHOW CHANGE OF STATUS ON ANNUNCIATOR | SHOW CHANGE OF STATUS ON CENTRAL PANEL | TRANSMIT FIRE ALARM SIGNAL TO CENTRAL STATION | TRANSMIT SUPERVISORY SIGNAL TO CENTRAL STATION | TRANSMIT TROUBLE SIGNAL TO CENTRAL STATION |
| MANUAL FIRE ALARM PULL BOXES | X | X | | | | | X | X | X | X | | | | | | | X | X | X | | |
| BUILDING SMOKE DETECTOR | X | X | | | | | X | X | X | X | | | | | | | X | X | X | | |
| DUCT SMOKE DETECTOR | | | X | X | | | | X | | | X | | | | | X | X | X | | X | |
| SPRINKLER WATER FLOW | X | X | | | | | X | X | X | X | | | | | | X | X | X | X | | |
| SPRINKLER TAMPER | | | X | X | | | | X | | | X | | | | | | X | X | | X | |
| ELEV. EQ. ROOM SMOKE DETECTOR | X | X | | | | | X | X | X | X | | | | X | | | X | X | X | | |
| ELEV. EQ. ROOM HEAT DETECTOR | X | X | | | | | X | X | X | X | | | | X | X | | X | X | X | | |
| ELEV. SHAFT HEAT DETECTOR | X | X | | | | | X | X | X | X | | | | | X | | X | X | X | | |
| 1ST FLOOR ELEV. LOBBY SMOKE DET. | X | X | | | | | X | X | X | X | | | X | | | | X | X | X | | |
| UPPER FLR. ELEV. LOBBY SMOKE DET. | X | X | | | | | X | X | X | X | | | | X | | | X | X | X | | |
| HOOD SUPPRESSION SYSTEM | X | X | | | | | X | X | X | X | | | | | | | X | X | X | | |
| NOTIFICATION DEVICE SHORT CIRCUIT | | | | | X | X | | X | | | | X | | | | | X | X | | | |
| OPEN CIRCUIT | | | | | X | X | | X | | | | X | | | | | X | X | | | X |
| GROUND FAULT | | | | | X | X | | X | | | | X | | | | | X | X | | | X |
| FIRE ALARM A.C. POWER FAILURE | | | | | X | X | | X | | | | X | | | | | X | X | | | X |
| FIRE ALARM SYSTEM LOW BATTERY | | | | | X | | | X | | | | X | | | | | X | X | | | X |
| GENERATOR NFPA 110 ALARM ACTIVE | | | X | X | | | | | | | | | | | | | | | | | |
| GENERATOR FUEL LEVEL | | | X | X | | | | | | | | | | | | | | | | | |
| | | | | | | | | | | | | | | | | | | | | | |
| FIRE PUMP RUNNING | | | X | | | | | | | | X | | | | | | | | | | |
| FIRE PUMP COMMON TROUBLE | | | X | | | | | | | | X | | | | | | | | | | |
| FIRE PUMP POWER FAILURE/PHASE REVER. | | | X | | | | | | | | X | | | | | | | | | | |

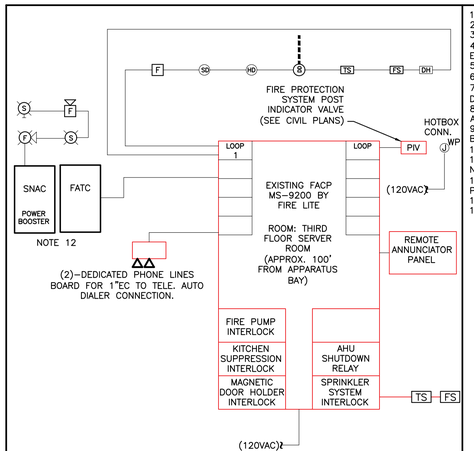


## 5 EXISTING FIRE ALARM RISER DIAGRAM
NO SCALE

1. FACP HAS A MINIMUM 24HR. BATTERY BACKUP.
2. FACP IS FULLY ANALOG ADDRESSABLE.
3. FACP IS CONNECTED TO A UL APPROVED CENTRAL STATION.
4. ZONE PER NFPA 72, 2013 AND MANUFACTURER'S RECOMMENDATIONS WITH NO ONE ZONE EXCEEDING 15,000 S.F. PER FLOOR.
5. COORDINATE QUANTITY AND LOCATIONS OF DEVICES WITH CONTRACT DRAWINGS.
6. LOCATE FIRE ALARM PULL STATION WITHIN 5' OF THE EXIT DOOR.
7. ACTIVATION OF AN ALARM ZONE SHALL CAUSE ALL AIR HANDLING EQUIPMENT TO SHUT DOWN (ALL DAMPERS, AIR HANDLERS AND EXHAUST FANS MUST STOP).
8. ACTIVATION OF KITCHEN HOOD SUPPRESSION SYSTEM PROVIDES SIGNAL TO FACP WHICH IN TURN ACTIVATES ALL ANNUNCIATING ZONES & CUTS OFF AHU SUPPLY AIR.
9. ALL VISUAL DEVICES WITHIN THE SAME AREA SHALL BE SYNCHRONIZED. IT SHALL BE A THREE BEAT TEMPORAL PATTERN.
10. ALL FIRE ALARM WIRING SHALL BE IN CONDUIT./FIRE ALARM CABLING SHALL BE PLENUM RATED.
11. PROVIDE MULTI-TEMPORAL SOUNDING CAPABILITY AT ALL AUDIO DEVICES FOR EMERGENCY NOTIFICATION FOR NON VOICE SYSTEMS COMPONENTS.
12. THE FIRE ALARM SYSTEM MANUFACTURER SHALL PROVIDE NOTIFICATION APPLIANCE CIRCUIT (NAC) POWER EXTENDERS AS REQUIRED.
13. THE CIRCUIT FEEDING THE FIRE ALARM PANEL IS DEDICATED FOR THE FIRE ALARM ONLY.
14. CONTRACTOR RESPONSIBLE FOR SHOP DRAWINGS AS REQUIRED BY LOCAL AHJ.

## GENERAL NOTES

ALL NOTES APPLY TO ALL DRAWINGS AND ALL TRADES. IT IS THE RESPONSIBILITY OF ALL CONTRACTORS AND TRADES TO COORDINATE THE INSTALLATION OF THEIR WORK WITH THE INSTALLATION OF WORK BY ALL OTHER CONTRACTORS AND TRADES. THE REQUIREMENTS OF THE DRAWINGS, GENERAL REQUIREMENTS AND ALL ITEMS OF THE CONTRACT DOCUMENTS ARE EQUALLY BINDING ON ALL CONTRACTORS AND TRADES. EACH CONTRACTOR IS REQUIRED TO MAINTAIN FULL SETS OF THE CONTRACT DOCUMENTS FOR HIS EMPLOYEES USE ON THE PROJECT TO ASSURE THAT ALL WORK IS PROPERLY COORDINATED AND INSTALLED WITH THE WORK OF OTHER CONTRACTORS AND TRADES.

WHENEVER THERE ARE DISCREPANCIES BETWEEN DRAWINGS, OR BETWEEN THE DRAWINGS AND SPECIFICATIONS, OR CONFLICTS WITHIN THE SPECIFICATIONS AND/OR DRAWINGS, AND SUCH DISCREPANCY IS NOT CALLED TO THE ARCHITECT'S ATTENTION IN TIME TO PERMIT CLARIFICATION BY ADDENDUM, THE CONTRACTOR SHALL BASE HIS BID UPON PROVIDING THE BETTER QUALITY OR GREATER OF WORK OR MATERIAL CALLED FOR, SHALL SUBMIT A WRITTEN STATEMENT WITH HIS PROPOSAL NOTING SUCH DISCREPANCIES, AND SHALL SO FURNISH AND INSTALL SUCH BETTER QUALITY OR GREATER QUANTITY UNLESS OTHERWISE ORDERED IN WRITING.

Project No.
1667

Date:
11/12/2020
Drawn by:
MCH
Checked by:
MKG
Revisions

© STEWART-COOPER-NEWELL ARCHITECTS, P.A.

THIS DRAWING IS THE PROPERTY OF STEWART-COOPER-NEWELL ARCHITECTS, P.A. UNDER THE COPYRIGHT LAWS OF THE UNITED STATES. THIS DRAWING MAY NOT BE REPRODUCED, PUBLISHED OR USED IN ANY WAY WITHOUT THE WRITTEN PERMISSION OF STEWART-COOPER-NEWELL ARCHITECTS, P.A.

optima engineering
150 Fayetteville St, Suite 520, Raleigh, NC 27601
1507 South Tryon St., Suite 300, Charlotte NC 28203
Phone: 919-926-2200 • www.optimaengineering.com
North Carolina License Number: C-0814

Stewart·Cooper·Newell Architects
719 East Second Avenue
Gastonia, NC 28054
Phone: 704.865.6311
Fax: 704.865.0046
1.800.671.0621
www.scn-architects.com

NORTH CAROLINA PROFESSIONAL SEAL 048210 ENGINEER MORGAN K. GUNTER
11/12/2020

BAY EXPANSION FOR
GREENVILLE FIRE RESCUE #1
GREENVILLE, NC

ELECTRICAL DETAILS

Sheet No.
10.03

THIS DRAWING IS AN INSTRUMENT OF SERVICE. THE DRAWING AND THE INFORMATION THEREON IS THE PROPERTY OF OPTIMA ENGINEERING, P.A. ANY REPRODUCTION, ALTERATION, OR USE FOR OTHER THAN THE INTENDED PROJECT, WITHOUT THE WRITTEN CONSENT OF OPTIMA ENGINEERING, P.A. IS EXPRESSLY FORBIDDEN. COPYRIGHT © OPTIMA ENGINEERING P.A. 2020, ALL RIGHTS RESERVED.

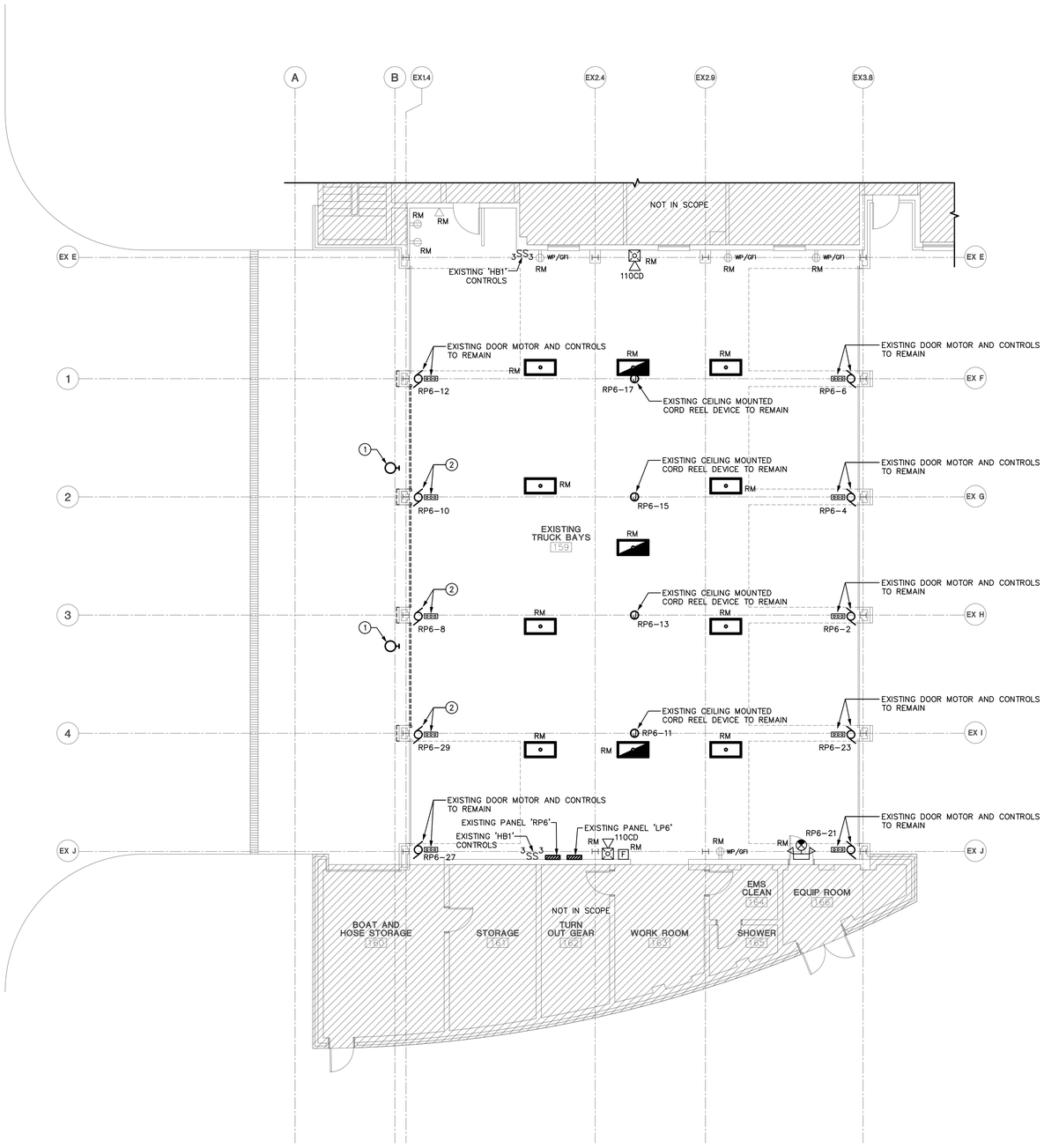


1 ELECTRICAL FLOOR PLAN - EXISTING & DEMOLITION

1/8" = 1'-0"

## GENERAL NOTES:

A. REFER TO DRAWING 10.00 FOR LEGEND, SYMBOLS AND GENERAL NOTES.
B. REFER TO ARCHITECTURAL DRAWINGS FOR ASSOCIATED NOTES, MOUNTING DETAILS, HEIGHTS AND EXACT LOCATIONS OF ALL DEVICES.
C. FOR ALL RELOCATED MECHANICAL EQUIPMENT, RELOCATE ASSOCIATED ELECTRICAL CONNECTIONS AND EXTEND FEEDERS AS REQUIRED TO NEW EQUIPMENT LOCATIONS. SEE NEW WORK PLAN FOR NEW LOCATIONS.
D. DASHED ARCHITECTURAL LINES INDICATE DEMOLITION. DISCONNECT AND REMOVE EXISTING ELECTRICAL DEVICES IN WALLS AND CEILINGS. TYPICAL IN ALL AREAS UNLESS OTHERWISE NOTED. COORDINATE WITH OTHER TRADES AS REQUIRED TO FACILITATE COMPLETE DEMOLITION.
E. CONTRACTOR SHALL MAKE SURE TO MAINTAIN CONTINUITY OF ELECTRICAL DEVICES THAT ARE OUTSIDE AREA OF WORK THAT ARE INTENDED TO REMAIN ENERGIZED.
F. MAINTAIN CONTINUITY OF BRANCH CIRCUITRY ASSOCIATED WITH ALL EXISTING POWER DEVICES TO REMAIN.
G. PROVIDE TYPED, UP-TO-DATE CIRCUIT DIRECTORIES FOR ALL AFFECTED EXISTING PANELS.

## KEYED NOTES:

1. EXISTING WALL SCONCE LIGHT FIXTURE TO BE REMOVED DURING DEMOLITION PHASE OF PROJECT. FIXTURE TO BE REINSTALLED IN NEW WORK PHASE. SEE LIGHTING PLAN, SHEET 10.21, FOR NEW FIXTURE LOCATION.

2. EXISTING OVERHEAD DOOR MOTOR AND CONTROLS TO BE REMOVED AND TURNED OVER TO OWNER. COORDINATE DEMOLITION SEQUENCING WITH GC. EXISTING 120V-1Ø 20A MOTOR CIRCUIT TO BE REUSED FOR NEW DOOR MOTOR. EXTEND CIRCUIT AS NECESSARY. SEE NEW WORK PLANS FOR MOTOR LOCATIONS.

## GENERAL NOTES

ALL NOTES APPLY TO ALL DRAWINGS AND ALL TRADES. IT IS THE RESPONSIBILITY OF ALL CONTRACTORS AND TRADES TO COORDINATE THE INSTALLATION OF THEIR WORK WITH THE INSTALLATION OF WORK BY ALL OTHER CONTRACTORS AND TRADES. THE REQUIREMENTS OF THE DRAWINGS, GENERAL REQUIREMENTS AND ALL ITEMS OF THE CONTRACT DOCUMENTS ARE EQUALLY BINDING ON ALL CONTRACTORS AND TRADES. EACH CONTRACTOR IS REQUIRED TO MAINTAIN FULL SETS OF THE CONTRACT DOCUMENTS FOR HIS EMPLOYEES USE ON THE PROJECT TO ASSURE THAT ALL WORK IS PROPERLY COORDINATED AND INSTALLED WITH THE WORK OF OTHER CONTRACTORS AND TRADES.

WHENEVER THERE ARE DISCREPANCIES BETWEEN DRAWINGS, OR BETWEEN THE DRAWINGS AND SPECIFICATIONS, OR CONFLICTS WITHIN THE SPECIFICATIONS AND/OR DRAWINGS, AND SUCH DISCREPANCY IS NOT CALLED TO THE ARCHITECT'S ATTENTION IN TIME TO PERMIT CLARIFICATION BY ADDENDUM, THE CONTRACTOR SHALL BASE HIS BID UPON PROVIDING THE BETTER QUALITY OR GREATER OF WORK OR MATERIAL CALLED FOR, SHALL SUBMIT A WRITTEN STATEMENT WITH HIS PROPOSAL NOTING SUCH DISCREPANCIES, AND SHALL SO FURNISH AND INSTALL SUCH BETTER QUALITY OR GREATER QUANTITY UNLESS OTHERWISE ORDERED IN WRITING.

**Project No.**
**1667**

**Date:**
**11/12/2020**
**Drawn by:**
**MCH**
**Checked by:**
**MKG**
**Revisions**

© STEWART-COOPER-NEWELL ARCHITECTS, P.A.

THIS DRAWING IS THE PROPERTY OF STEWART-COOPER-NEWELL ARCHITECTS, P.A. UNDER THE COPYRIGHT LAWS OF THE UNITED STATES. THIS DRAWING MAY NOT BE REPRODUCED, PUBLISHED OR USED IN ANY WAY WITHOUT THE WRITTEN PERMISSION OF STEWART-COOPER-NEWELL ARCHITECTS, P.A.

optima engineering
150 Fayetteville St., Suite 520, Raleigh, NC 27601
1527 South Tryon St., Suite 300, Charlotte NC 28203
Phone: 919-926-2200 • www.optimaengineering.com
North Carolina License Number C-0814

Stewart·Cooper·Newell Architects
719 East Second Avenue
Gastonia, NC 28054
Phone: 704.865.6311
Fax: 704.865.0046
1.800.671.0621
www.scn-architects.com

NORTH CAROLINA PROFESSIONAL SEAL 042210 ENGINEER ARCAN K. GUNI
11/12/2020

**BAY EXPANSION FOR**
**GREENVILLE FIRE RESCUE #1**
**GREENVILLE, NC**

**ELECTRICAL FLOOR PLAN - EXISTING & DEMOLITION**

**Sheet No.**
**10.10**

THIS DRAWING IS AN INSTRUMENT OF SERVICE. THE DRAWING AND THE INFORMATION THEREON IS THE PROPERTY OF OPTIMA ENGINEERING, P.A. ANY REPRODUCTION, ALTERATION, OR USE FOR OTHER THAN THE INTENDED PROJECT, WITHOUT THE WRITTEN CONSENT OF OPTIMA ENGINEERING, P.A. IS EXPRESSLY FORBIDDEN. COPYRIGHT © OPTIMA ENGINEERING P.A. 2020, ALL RIGHTS RESERVED.

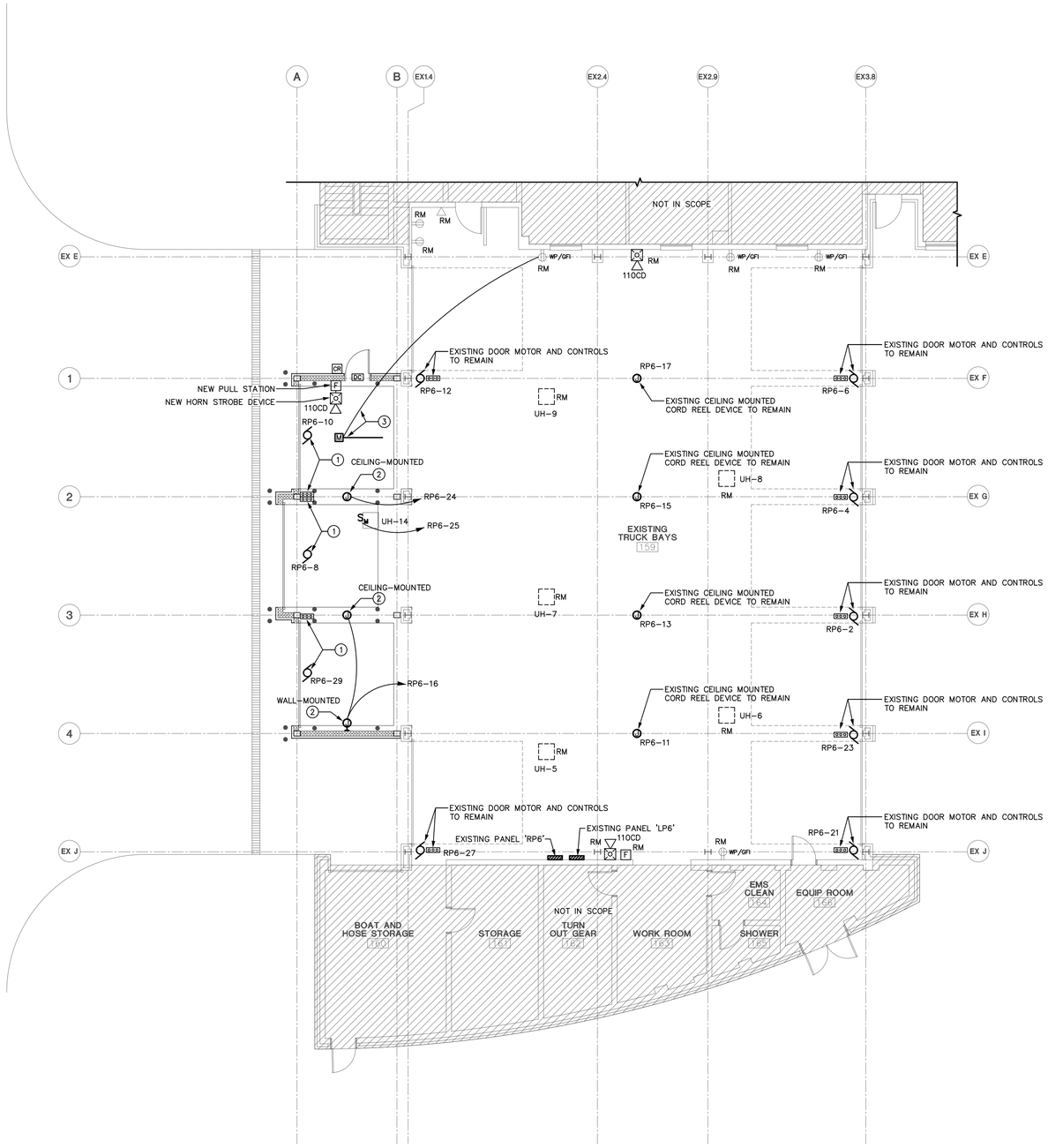


1 ELECTRICAL FLOOR PLAN - NEW WORK

1/8" = 1'-0"

## GENERAL NOTES:

A. REFER TO DRAWING 10.00 FOR LEGEND, SYMBOLS AND GENERAL NOTES.
B. REFER TO ARCHITECTURAL DRAWINGS FOR ASSOCIATED NOTES, MOUNTING DETAILS, HEIGHTS AND EXACT LOCATIONS OF ALL DEVICES.
C. VOLTAGE DROP HAS BEEN CONSIDERED IN THE DESIGN OF ALL BRANCH CIRCUITRY AND FEEDER SIZES BASED UPON THE ILLUSTRATED EQUIPMENT LAYOUTS AND SHORTEST CONDUCTOR/RACEWAY ROUTING. THE ELECTRICAL CONTRACTOR SHALL BE RESPONSIBLE FOR DEVIATIONS TAKEN THAT WILL INCREASE CONDUCTOR/RACEWAY ROUTING LENGTHS. BRANCH CIRCUITS LONGER THAN 75' FOR 120V FROM PANEL TO LAST OUTLET SHALL BE INCREASED A MINIMUM OF ONE SIZE ABOVE THAT SPECIFIED TO LIMIT VOLTAGE DROP TO LESS THAN 3%. FEEDERS SHALL FOLLOW SIMILAR GUIDELINES AND BE LIMITED TO 2% DROP.
D. POWER BRANCH CIRCUITRY SHALL BE INSTALLED IN CONDUIT FROM THE PANEL TO THE FIRST DEVICE AND/OR WHERE EXPOSED. FLEXIBLE CONDUIT WHIPS MAY BE USED IN LENGTHS NO GREATER THAN 6'-0". TYPE MC CABLE MAY ONLY BE USED ABOVE ACCESSIBLE CEILINGS.
E. FOR ALL RELOCATED MECHANICAL EQUIPMENT, RELOCATE ASSOCIATED ELECTRICAL CONNECTIONS AND EXTEND FEEDERS AS REQUIRED TO NEW EQUIPMENT LOCATIONS. SEE NEW WORK PLAN FOR NEW LOCATIONS.
F. CONTRACTOR SHALL MAKE SURE TO MAINTAIN CONTINUITY OF ELECTRICAL DEVICES THAT ARE OUTSIDE AREA OF WORK THAT ARE INTENDED TO REMAIN ENERGIZED.
G. MAINTAIN CONTINUITY OF BRANCH CIRCUITRY ASSOCIATED WITH ALL EXISTING POWER DEVICES TO REMAIN.
H. PROVIDE TYPED, UP-TO-DATE CIRCUIT DIRECTORIES FOR ALL AFFECTED EXISTING PANELS.

## KEYED NOTES:

1. NEW OVERHEAD DOOR MOTOR AND DOOR CONTROLS. NEW DOOR MOTOR TO BE 120V-1Ø, 1HP MOTOR. COORDINATE MOUNTING LOCATIONS AND CONTROL WIRING REQUIREMENTS WITH DOOR INSTALLER AND OWNER PRIOR TO ROUGH-IN. EXTEND EXISTING CIRCUIT TO NEW MOTOR LOCATION. CONNECT NEW DOOR CONTROLS TO EXISTING MASTER DOOR CONTROLLER. VERIFY LOCATION IN FIELD WITH FIRE DEPARTMENT.

2. NEW CORD REEL WITH SINGLE NEMA 5-20R RECEPTACLE PROVIDE WITH 45' CABLE LENGTH. MATCH MANUFACTURER AND MODEL OF EXISTING CORD REELS. COORDINATE EXACT LOCATION WITH FIRE DEPARTMENT PRIOR TO ROUGH-IN.

3. NEW MOTORIZED DAMPER FOR EXHAUST FAN EF-1, CONNECT TO EXISTING LOCAL 120V-1Ø 20A BRANCH RECEPTACLE CIRCUIT AS SHOWN. LOAD ON CIRCUIT NOT TO EXCEED 1.92KVA. PROVIDE RELAY TO INTERLOCK MOTORIZED DAMPER WITH NEW FAN EF-1, COORDINATE EXACT REQUIREMENTS WITH M.C. AND PROVIDE ACCORDINGLY.

## GENERAL NOTES

ALL NOTES APPLY TO ALL DRAWINGS AND ALL TRADES. IT IS THE RESPONSIBILITY OF ALL CONTRACTORS AND TRADES TO COORDINATE THE INSTALLATION OF THEIR WORK WITH THE INSTALLATION OF WORK BY ALL OTHER CONTRACTORS AND TRADES. THE REQUIREMENTS OF THE DRAWINGS, GENERAL REQUIREMENTS AND ALL ITEMS OF THE CONTRACT DOCUMENTS ARE EQUALLY BINDING ON ALL CONTRACTORS AND TRADES. EACH CONTRACTOR IS REQUIRED TO MAINTAIN FULL SETS OF THE CONTRACT DOCUMENTS FOR HIS EMPLOYEES USE ON THE PROJECT TO ASSURE THAT ALL WORK IS PROPERLY COORDINATED AND INSTALLED WITH THE WORK OF OTHER CONTRACTORS AND TRADES.

WHENEVER THERE ARE DISCREPANCIES BETWEEN DRAWINGS, OR BETWEEN THE DRAWINGS AND SPECIFICATIONS, OR CONFLICTS WITHIN THE SPECIFICATIONS AND/OR DRAWINGS, AND SUCH DISCREPANCY IS NOT CALLED TO THE ARCHITECT'S ATTENTION IN TIME TO PERMIT CLARIFICATION BY ADDENDUM, THE CONTRACTOR SHALL BASE HIS BID UPON PROVIDING THE BETTER QUALITY OR GREATER OF WORK OR MATERIAL CALLED FOR, SHALL SUBMIT A WRITTEN STATEMENT WITH HIS PROPOSAL NOTING SUCH DISCREPANCIES, AND SHALL SO FURNISH AND INSTALL SUCH BETTER QUALITY OR GREATER QUANTITY UNLESS OTHERWISE ORDERED IN WRITING.

Project No.
1667

Date:
11/12/2020
Drawn by:
MCH
Checked by:
MKG
Revisions

© STEWART-COOPER-NEWELL ARCHITECTS, P.A.

THIS DRAWING IS THE PROPERTY OF STEWART-COOPER-NEWELL ARCHITECTS, P.A. AND IS PROTECTED BY FEDERAL COPYRIGHT LAWS. THIS DRAWING MAY NOT BE REPRODUCED, PUBLISHED OR USED IN ANY WAY WITHOUT THE WRITTEN PERMISSION OF STEWART-COOPER-NEWELL ARCHITECTS, P.A.

optima engineering
150 Fayetteville St., Suite 520, Raleigh, NC 27601
1527 South Tryon St., Suite 300, Charlotte NC 28203
Phone: 919-926-2200 • www.optimaengineering.com
North Carolina License Number C-0814

719 East Second Avenue
Gastonia, NC 28054
Phone: 704.865.6311
Fax: 704.865.0046
1.800.671.0621

Stewart·Cooper·Newell Architects
www.scn-architects.com

NORTH CAROLINA PROFESSIONAL SEAL 042210 ENGINEER MORGAN K. GUNN
11/12/2020

BAY EXPANSION FOR
GREENVILLE FIRE RESCUE #1
GREENVILLE, NC

ELECTRICAL FLOOR PLAN - NEW WORK

Sheet No.
10.11

THIS DRAWING IS AN INSTRUMENT OF SERVICE. THE DRAWING AND THE INFORMATION THEREON IS THE PROPERTY OF OPTIMA ENGINEERING, P.A. ANY REPRODUCTION, ALTERATION, OR USE FOR OTHER THAN THE INTENDED PROJECT, WITHOUT THE WRITTEN CONSENT OF OPTIMA ENGINEERING, P.A. IS EXPRESSLY FORBIDDEN. COPYRIGHT © OPTIMA ENGINEERING P.A. 2020, ALL RIGHTS RESERVED.

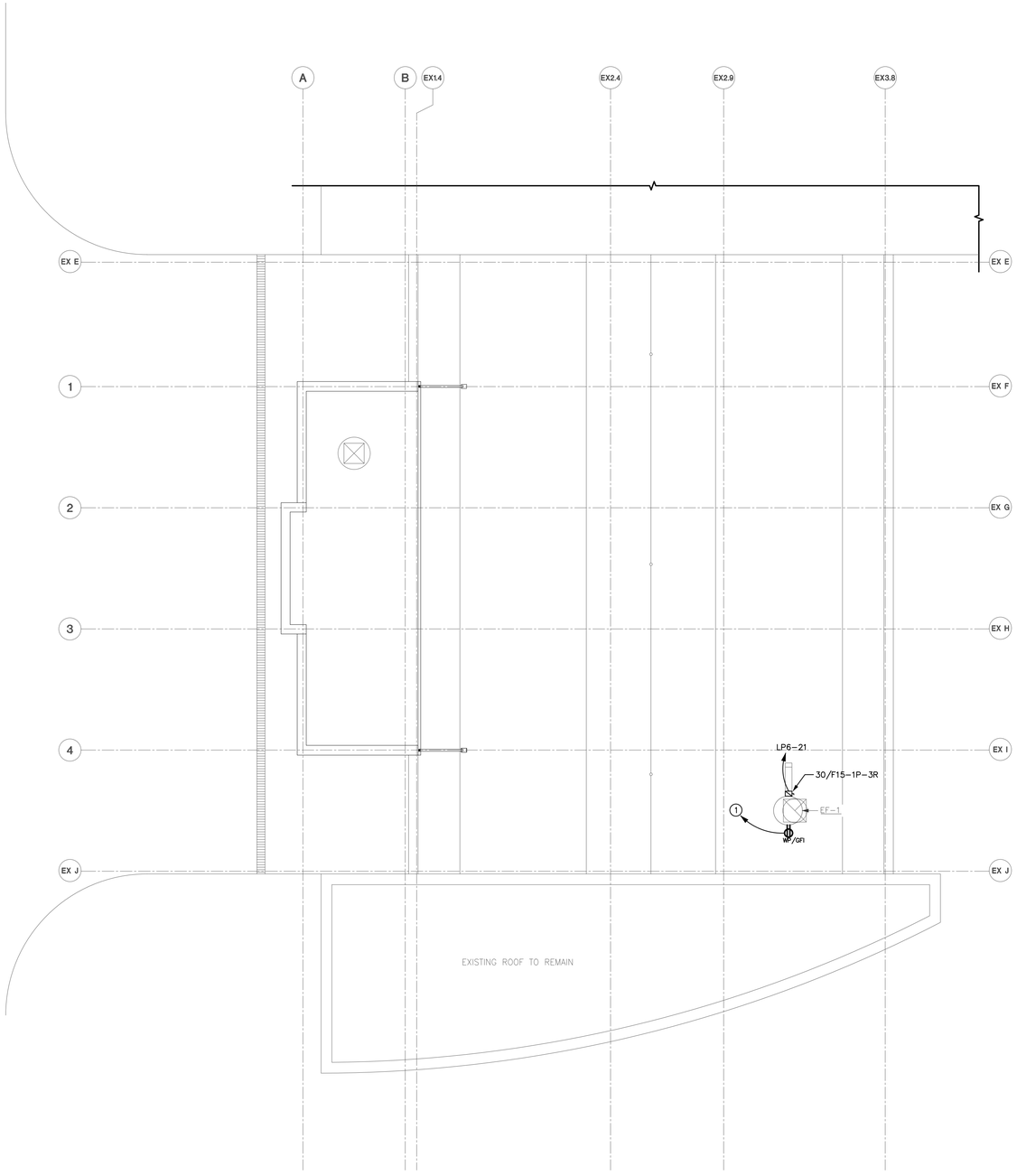


1 ELECTRICAL ROOF PLAN
1/8" = 1'-0"

## GENERAL NOTES:

A. REFER TO DRAWING 10.00 FOR LEGEND, SYMBOLS AND GENERAL NOTES.
B. REFER TO ARCHITECTURAL DRAWINGS FOR ASSOCIATED NOTES, MOUNTING DETAILS, HEIGHTS AND EXACT LOCATIONS OF ALL DEVICES.
C. VOLTAGE DROP HAS BEEN CONSIDERED IN THE DESIGN OF ALL BRANCH CIRCUITRY AND FEEDER SIZES BASED UPON THE ILLUSTRATED EQUIPMENT LAYOUTS AND SHORTEST CONDUCTOR/RACEWAY ROUTING. THE ELECTRICAL CONTRACTOR SHALL BE RESPONSIBLE FOR DEVIATIONS TAKEN THAT WILL INCREASE CONDUCTOR/RACEWAY ROUTING LENGTHS. BRANCH CIRCUITS LONGER THAN 75' FOR 120V FROM PANEL TO LAST OUTLET SHALL BE INCREASED A MINIMUM OF ONE SIZE ABOVE THAT SPECIFIED TO LIMIT VOLTAGE DROP TO LESS THAN 3%. FEEDERS SHALL FOLLOW SIMILAR GUIDELINES AND BE LIMITED TO 2% DROP.
D. POWER BRANCH CIRCUITRY SHALL BE INSTALLED IN CONDUIT FROM THE PANEL TO THE FIRST DEVICE AND/OR WHERE EXPOSED. FLEXIBLE CONDUIT WHIPS MAY BE USED IN LENGTHS NO GREATER THAN 6'-0". TYPE MC CABLE MAY ONLY BE USED ABOVE ACCESSIBLE CEILINGS.
E. FOR ALL RELOCATED MECHANICAL EQUIPMENT, RELOCATE ASSOCIATED ELECTRICAL CONNECTIONS AND EXTEND FEEDERS AS REQUIRED TO NEW EQUIPMENT LOCATIONS. SEE NEW WORK PLAN FOR NEW LOCATIONS.
F. CONTRACTOR SHALL MAKE SURE TO MAINTAIN CONTINUITY OF ELECTRICAL DEVICES THAT ARE OUTSIDE AREA OF WORK THAT ARE INTENDED TO REMAIN ENERGIZED.
G. MAINTAIN CONTINUITY OF BRANCH CIRCUITRY ASSOCIATED WITH ALL EXISTING POWER DEVICES TO REMAIN.
H. PROVIDE TYPED, UP-TO-DATE CIRCUIT DIRECTORIES FOR ALL AFFECTED EXISTING PANELS.

## KEYED NOTES:

1. CONNECT NEW WP/GFI ROOFTOP CONVENIENCE RECEPTACLE TO EXISTING 120V-1Ø, 20A BRANCH RECEPTACLE CIRCUIT RP6-3. LOAD ON CIRCUIT SHALL NOT EXCEED 1.92KVA. IF RECEPTACLE CAN'T BE MOUNTED TO NEW EXHAUST FAN, PROVIDE UNISTRUT ASSEMBLY FOR RECEPTACLE MOUNTING. ROOF MEMBRANE WARRANTY SHALL BE MAINTAINED. COORDINATE ALL ROOF PENETRATIONS WITH G.C. AND STRUCTURAL.

## GENERAL NOTES

ALL NOTES APPLY TO ALL DRAWINGS AND ALL TRADES. IT IS THE RESPONSIBILITY OF ALL CONTRACTORS AND TRADES TO COORDINATE THE INSTALLATION OF THEIR WORK WITH THE INSTALLATION OF WORK BY ALL OTHER CONTRACTORS AND TRADES. THE REQUIREMENTS OF THE DRAWINGS, GENERAL REQUIREMENTS AND ALL ITEMS OF THE CONTRACT DOCUMENTS ARE EQUALLY BINDING ON ALL CONTRACTORS AND TRADES. EACH CONTRACTOR IS REQUIRED TO MAINTAIN FULL SETS OF THE CONTRACT DOCUMENTS FOR HIS EMPLOYEES USE ON THE PROJECT TO ASSURE THAT ALL WORK IS PROPERLY COORDINATED AND INSTALLED WITH THE WORK OF OTHER CONTRACTORS AND TRADES.

WHENEVER THERE ARE DISCREPANCIES BETWEEN DRAWINGS, OR BETWEEN THE DRAWINGS AND SPECIFICATIONS, OR CONFLICTS WITHIN THE SPECIFICATIONS AND/OR DRAWINGS, AND SUCH DISCREPANCY IS NOT CALLED TO THE ARCHITECT'S ATTENTION IN TIME TO PERMIT CLARIFICATION BY ADDENDUM, THE CONTRACTOR SHALL BASE HIS BID UPON PROVIDING THE BETTER QUALITY OR GREATER OF WORK OR MATERIAL CALLED FOR, SHALL SUBMIT A WRITTEN STATEMENT WITH HIS PROPOSAL NOTING SUCH DISCREPANCIES, AND SHALL SO FURNISH AND INSTALL SUCH BETTER QUALITY OR GREATER QUANTITY UNLESS OTHERWISE ORDERED IN WRITING.

Project No.
1667

Date:
11/12/2020
Drawn by:
MCH
Checked by:
MKG
Revisions

© STEWART-COOPER-NEWELL ARCHITECTS, P.A.

THIS DRAWING IS THE PROPERTY OF STEWART-COOPER-NEWELL ARCHITECTS, P.A. AND IS PROTECTED BY FEDERAL COPYRIGHT LAWS. THIS DRAWING MAY NOT BE REPRODUCED, PUBLISHED OR USED IN ANY WAY WITHOUT THE WRITTEN PERMISSION OF STEWART-COOPER-NEWELL ARCHITECTS, P.A.

optima engineering
150 Fayetteville St., Suite 520, Raleigh, NC 27601
1527 South Tryon St., Suite 300, Charlotte NC 28203
Phone: 919-926-2200 • www.optimaengineering.com
North Carolina License Number C-0814

719 East Second Avenue
Gastonia, NC 28054
Phone: 704.865.6311
Fax: 704.865.0046

Stewart·Cooper·Newell Architects
www.scn-architects.com
1.800.671.0621

NORTH CAROLINA PROFESSIONAL SEAL 042210 ENGINEER MEGAN K. GUNN
11/12/2020

BAY EXPANSION FOR
GREENVILLE FIRE RESCUE #1
GREENVILLE, NC

ELECTRICAL ROOF PLAN

Sheet No.
10.12

THIS DRAWING IS AN INSTRUMENT OF SERVICE. THE DRAWING AND THE INFORMATION THEREON IS THE PROPERTY OF OPTIMA ENGINEERING, P.A. ANY REPRODUCTION, ALTERATION, OR USE FOR OTHER THAN THE INTENDED PROJECT, WITHOUT THE WRITTEN CONSENT OF OPTIMA ENGINEERING, P.A. IS EXPRESSLY FORBIDDEN. COPYRIGHT © OPTIMA ENGINEERING P.A. 2020, ALL RIGHTS RESERVED.

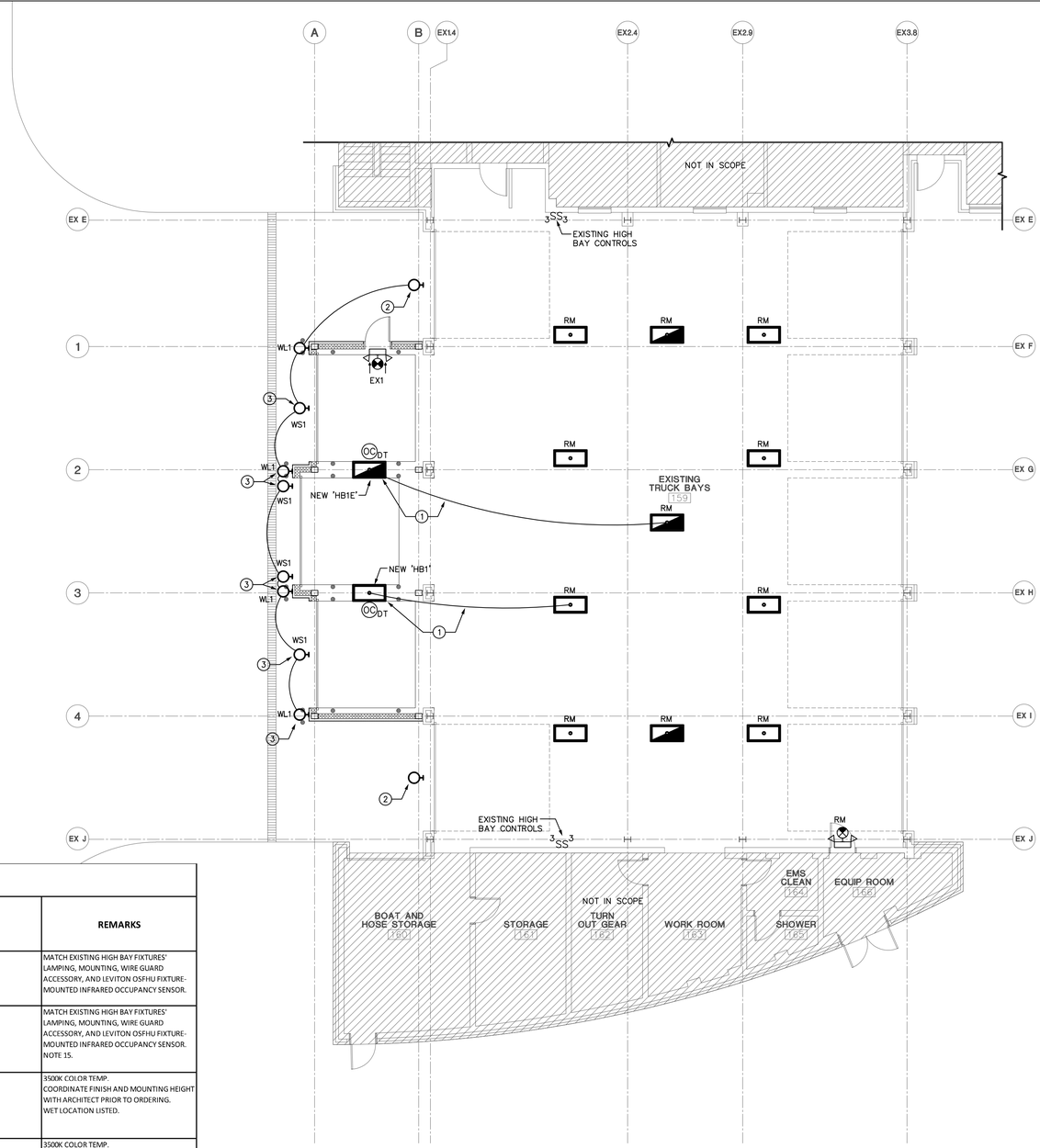


1 LIGHTING PLAN - NEW WORK
1/8" = 1'-0"

## GENERAL NOTES:

A. REFER TO DRAWING E0.01 FOR LEGEND, SYMBOLS AND GENERAL NOTES.
B. REFER TO ARCHITECTURAL DRAWINGS, INCLUDING BUT NOT LIMITED TO, REFLECTED CEILING PLANS AND ELEVATIONS FOR ASSOCIATED NOTES, MOUNTING DETAILS AND EXACT LOCATIONS OF ALL LIGHTING FIXTURES.
C. PROVIDE COMMON FACE PLATE AND REQUIRED METAL INTERIOR BOX BARRIERS FOR ALL MULTIPLE GANG SWITCH LOCATIONS.
D. VOLTAGE DROP HAS BEEN CONSIDERED IN THE DESIGN OF ALL BRANCH CIRCUIT AND FEEDER SIZES BASED UPON THE ILLUSTRATED EQUIPMENT LAYOUTS AND SHORTEST CONDUCTOR/RACEWAY ROUTING. THE CONTRACTOR SHALL BE RESPONSIBLE FOR DEVIATIONS TAKEN THAT WILL INCREASE CONDUCTOR/RACEWAY ROUTING LENGTHS. BRANCH CIRCUITS LONGER THAN 75' FOR 120V AND 175' FOR 277V FROM PANEL TO LAST OUTLET SHALL BE INCREASED A MINIMUM OF ONE SIZE ABOVE THAT SPECIFIED TO LIMIT VOLTAGE DROP TO LESS THAN 3%.
E. COORDINATE THE PLACEMENT OF ALL PENDENT, SURFACE, AND SEMI-FLUSH FIXTURES AND DEVICES WITH THE FIRE PROTECTION CONTRACTOR TO MAINTAIN NFPA 13 REQUIRED SEPARATION BETWEEN SPRINKLER HEADS AND OBSTRUCTIONS.
F. LIGHTING BRANCH CIRCUITRY SHALL BE INSTALLED IN CONDUIT FROM THE PANELBOARD TO THE FIRST DEVICE AND/OR WHERE EXPOSED. FLEXIBLE CONDUIT WHIPS MAY BE USED IN LENGTHS NO GREATER THAN 6'-0". TYPE MC CABLE USED ABOVE ACCESSIBLE CEILINGS.
G. CONTRACTOR SHALL MAKE SURE TO MAINTAIN CONTINUITY OF ELECTRICAL DEVICES THAT ARE OUTSIDE AREA OF WORK THAT ARE INTENDED TO REMAIN ENERGIZED.
H. MAINTAIN CONTINUITY OF BRANCH CIRCUITRY ASSOCIATED WITH ALL EXISTING LIGHT FIXTURES TO REMAIN.

## KEYED NOTES:

1. CONNECT NEW HI BAY FIXTURE TO EXISTING 277V-1Ø, 20A LOCAL LIGHTING CIRCUIT AND CONTROLS AS SHOWN. LOAD ON CIRCUIT SHALL NOT EXCEED 4.4KVA. COORDINATE MOUNTING HEIGHT AND LOCATION WITH STRUCTURE AND OTHER BUILDING ELEMENTS TO AVOID CLASHES. SEE DETAIL #2/10.03 FOR MOUNTING REQUIREMENTS.
2. EXISTING WALL SCONCE LIGHT FIXTURE REMOVED DURING DEMOLITION PHASE TO BE REINSTALLED ABOVE BAY DOOR AS SHOWN. SEE ARCHITECTURAL ELEVATION FOR MOUNTING HEIGHT. RECONNECT FIXTURE TO EXISTING 277V-1Ø, 20A EXTERIOR LIGHTING CIRCUIT AND CONTROLS PREVIOUSLY CONNECTED TO. EXTEND CIRCUITRY AS NECESSARY.
3. NEW WALL SCONCE LIGHT FIXTURE. COORDINATE MOUNTING LOCATION WITH ARCHITECTURAL ELEVATION. CONNECT FIXTURE TO EXISTING 277V-1Ø, 20A EXTERIOR LIGHTING CIRCUIT AND CONTROLS AS SHOWN. LOAD ON CIRCUIT SHALL NOT EXCEED 4.4KVA.

## LIGHT FIXTURE SCHEDULE

| TYPE | DESCRIPTION | LAMP | # OF LAMPS | TOTAL FIXTURE WATTAGE | BALLAST/DRIVER | VOLTAGE | MANUFACTURER | MODEL | REMARKS |
|---|---|---|---|---|---|---|---|---|---|
| HB1 | 2X4 HIGH BAY | LED T5HO EQUIVILENT (26W MAX PER LAMP) | 4 | 104W | N/A | UNIV | ON TIME LIGHTING | IB SERIES - MATCH EXISTING FIXTURES | MATCH EXISTING HIGH BAY FIXTURES' LAMPING, MOUNTING, WIRE GUARD ACCESSORY, AND LEVITON OSFHU FIXTURE-MOUNTED INFRARED OCCUPANCY SENSOR. |
| HB1E | 2X4 HIGH BAY W/ EMERGENCY BATTERY PACK | LED T5HO EQUIVILENT (26W MAX PER LAMP) | 4 | 104W | N/A | UNIV | ON TIME LIGHTING | IB SERIES - MATCH EXISTING FIXTURES | MATCH EXISTING HIGH BAY FIXTURES' LAMPING, MOUNTING, WIRE GUARD ACCESSORY, AND LEVITON OSFHU FIXTURE-MOUNTED INFRARED OCCUPANCY SENSOR. NOTE 15. |
| WL1 | 60" LINEAR WALL MOUNTED LED FIXTURE | LED | LED | 22W | INTEGRAL LED DRIVER | UNIV | ALVA | TESSIE 60" _ 3500 | 3500K COLOR TEMP. COORDINATE FINISH AND MOUNTING HEIGHT WITH ARCHITECT PRIOR TO ORDERING. WET LOCATION LISTED. |
| WS1 | STEM ARM WALL MOUNTED LED FIXTURE | LED | LED | 35W | INTEGRAL LED DRIVER | UNIV | BASELITE<br>ANP<br>BEACON | FIXTURE: M712 CFWTM 3500K<br>ARM & MOUNTING: E1 WITH SQ 3/4" MOUNT | 3500K COLOR TEMP. COORDINATE FINISH, OPTIONS, MOUNTING ARM & HEIGHT WITH ARCHITECT PRIOR TO ORDERING. WET LOCATION LISTED. |
| EX1 | EMERGENCY BATTERY EGRESS LIGHT AND EXIT COMBO | LED | 2 | 5W | INTEGRAL LED DRIVER | UNIV | MATCH EXISTING | MATCH TYPE AND STYLE OF EXISTING FIXTURE IN BAY | TEST SWITCH PROVIDED. SEALED 90 MINUTE BATTERY. |

### LIGHTING FIXTURE SCHEDULE NOTES:

1. LAMPS ARE BASED ON OSRAM/SYLVANIA UNLESS OTHERWISE NOTED. ALL FLUORESCENT LAMPS SHALL MATCH EXISTING. ALL FLUORESCENT BALLASTS SHALL BE ELECTRONIC AS SPECIFIED. SUBMITTAL SHEETS SHALL BE SUBMITTED WITH FIXTURE SUBMITTALS. FLUORESCENT LAMP AND BALLAST OR DRIVER/DIODE BOARD WARRANTY SHALL BE COMPLETED BY CONTRACTOR AND TURNED OVER TO OWNER AT END OF PROJECT.
2. LED DRIVERS SHALL BE PROVIDED FROM PER MANUFACTURER RECOMMENDATION. AS PART OF THIS RECOMMENDATION COORDINATE THE REQUIRED WAVE OUTPUT SO THEY ARE COMPATIBLE. THIS INCLUDES EMERGENCY DRIVERS.
3. SEE ARCHITECTURAL REFLECTED CEILING PLAN FOR EXACT FIXTURE LOCATIONS.
4. ALL ELECTRONIC BALLASTS FOR T5 (5/8" DIAMETER) LAMPS AND BELOW SHALL HAVE END OF LIFE SHUTDOWN PROTECTION.
5. PROVIDE LOW-TEMP (0 degrees F MINIMUM) BALLAST(S)/DRIVER(S) FOR ALL FIXTURES INSTALLED IN EXTERIOR LOCATIONS OR OTHER AREAS SUBJECT TO COLD WEATHER.
6. FIXTURES WITH EMERGENCY BATTERY PACKS SHALL BE SUPPLIED WITH 1100 LUMEN INVERTERS.
7. PROVIDE INTEGRAL SURGE PROTECTION ON ALL EXTERIOR LED DRIVER FIXTURE TYPES.
8. FLUORESCENT LUMINAIRES THAT UTILIZE DOUBLE-ENDED LAMPS AND CONTAIN BALLAST(S) THAT CAN BE SERVICED IN A PLACE SHALL HAVE A DISCONNECTING MEANS EITHER INTERNAL OR EXTERNAL TO EACH LUMINAIRE PER NEC 410.130.G
9. THE CONTRACTOR SHALL VERIFY THE LEAD TIME OF ALL PRODUCTS SPECIFIED IN THIS SCHEDULE AT THE TIME OF PACKAGE QUOTE.
10. DURING THE BID PROCESS, THE CONTRACTOR SHALL NOTIFY THE ARCHITECT/ENGINEER OF ANY DELIVERY/SCHEDULING ISSUES.
11. NO SUBSTITUTIONS WILL BE ALLOWED DUE TO LACK OF COORDINATION OF DELIVERY DATES AND CONSTRUCTION SCHEDULE AFTER BID.
12. ALL EXPEDITED EXPENSES SHALL BE THE RESPONSIBILITY OF THE CONTRACTOR.
13. BALLAST BY ADVANCE, GE OR UNIVERSAL TRIAD ARE ACCEPTABLE FOR SUBMITTION PROVIDED THEY MEET INTENDED CRITERIA AS LISTED IN THIS SCHEDULE.
14. LED DRIVERS LOCATED IN UNCONDITIONED SPACES SHALL BE RATED FOR 90 DEGREES F.
15. PROVIDE 90 MINUTE EMERGENCY BATTERY BACK UP. EMERGENCY BACK UP SHALL BE BASED ON TYPE OF FIXTURE, LED DRIVER, BALLAST, ETC. EMERGENCY BACKUP SHALL BE DUAL INPUT FOR BOTH SWITCHING AND CHARGING. PROVIDE UNSWITCHED "HOT" FROM LOCAL CIRCUIT UNLESS OTHERWISE INDICATED ON PLANS. PROVIDE WITH INDICATOR LIGHT. INSTALL LED INDICATOR ON LIGHT FIXTURE. BODINE, PHILLIPS, POWER SENTRY OR EQUAL.

## GENERAL NOTES

ALL NOTES APPLY TO ALL DRAWINGS AND ALL TRADES. IT IS THE RESPONSIBILITY OF ALL CONTRACTORS AND TRADES TO COORDINATE THE INSTALLATION OF THEIR WORK WITH THE INSTALLATION OF WORK BY ALL OTHER CONTRACTORS AND TRADES. THE REQUIREMENTS OF THE DRAWINGS, GENERAL REQUIREMENTS AND ALL ITEMS OF THE CONTRACT DOCUMENTS ARE EQUALLY BINDING ON ALL CONTRACTORS AND TRADES. EACH CONTRACTOR IS REQUIRED TO MAINTAIN FULL SETS OF THE CONTRACT DOCUMENTS FOR HIS EMPLOYEES USE ON THE PROJECT TO ASSURE THAT ALL WORK IS PROPERLY COORDINATED AND INSTALLED WITH THE WORK OF OTHER CONTRACTORS AND TRADES.

WHENEVER THERE ARE DISCREPANCIES BETWEEN DRAWINGS, OR BETWEEN THE DRAWINGS AND SPECIFICATIONS, OR CONFLICTS WITHIN THE SPECIFICATIONS AND/OR DRAWINGS, AND SUCH DISCREPANCY IS NOT CALLED TO THE ARCHITECT'S ATTENTION IN TIME TO PERMIT CLARIFICATION BY ADDENDUM, THE CONTRACTOR SHALL BASE HIS BID UPON PROVIDING THE BETTER QUALITY OR GREATER OF WORK OR MATERIAL CALLED FOR, SHALL SUBMIT A WRITTEN STATEMENT WITH HIS PROPOSAL NOTING SUCH DISCREPANCIES, AND SHALL SO FURNISH AND INSTALL SUCH BETTER QUALITY OR GREATER QUANTITY UNLESS OTHERWISE ORDERED IN WRITING.

Project No.
1667

Date:
11/12/2020
Drawn by:
MCH
Checked by:
MKG
Revisions

© STEWART-COOPER-NEWELL ARCHITECTS, P.A.

THIS DRAWING IS THE PROPERTY OF STEWART-COOPER-NEWELL ARCHITECTS, P.A. AND THE REPRODUCTION IS RESTRICTED BY LAW. THIS DRAWING MAY NOT BE REPRODUCED, PUBLISHED OR USED IN ANY WAY WITHOUT THE WRITTEN PERMISSION OF STEWART-COOPER-NEWELL ARCHITECTS, P.A.

optima engineering
150 Fayetteville St., Suite 520, Raleigh, NC 27601
1627 South Tryon St., Suite 300, Charlotte NC 28203
Phone: 919-926-2200 • www.optimaengineering.com
North Carolina License Number C-0814

Stewart·Cooper·Newell Architects
719 East Second Avenue
Gastonia, NC 28054
Phone: 704.865.6311
Fax: 704.865.0046
1.800.671.0621
www.scn-architects.com

NORTH CAROLINA PROFESSIONAL ENGINEER SEAL 048210 MORGAN K. CUNNINGHAM
11/12/2020

BAY EXPANSION FOR
GREENVILLE FIRE RESCUE #1
GREENVILLE, NC

LIGHTING PLAN - NEW WORK

Sheet No.
10.21



THIS DRAWING IS AN INSTRUMENT OF SERVICE, THE DRAWING AND THE INFORMATION THEREON IS THE PROPERTY OF OPTIMA ENGINEERING, P.A. ANY REPRODUCTION, ALTERATION, OR USE FOR OTHER THAN THE INTENDED PROJECT, WITHOUT THE WRITTEN CONSENT OF OPTIMA ENGINEERING, P.A. IS EXPRESSLY FORBIDDEN. COPYRIGHT © OPTIMA ENGINEERING P.A. 2020, ALL RIGHTS RESERVED.

## FAN SCHEDULE

| SYMBOL | LOCATION | TYPE | ELECTRICAL DATA WATTS | H.P. | VOLTAGE | DISCONNECT |
|---|---|---|---|---|---|---|
| EF-1 | APPARATUS BAY | EXHAUST | – | 1/2 | 277V-1ø | 30/F15-1P-3R |

## NEW HOT WATER UNIT HEATER SCHEDULE

| SYMBOL | LOCATION | MOTOR R.P.M. | H.P. | VOLTAGE | DISCONNECT |
|---|---|---|---|---|---|
| UH-14 | TRUCK BAYS | 1070 | 1/8 | 115V-1ø | MANUAL MOTOR STARTER |

## EXISTING PANEL: LP6

EXTG MFGR

VOLTAGE: 277 / 480 — 3 PHASE — 4 WIRE — EXTG TYPE

MOUNTING: SURFACE — 100 AMP — MAIN CIRCUIT BREAKER — 14,000 AIC

| LOAD KVA | LOAD SERVED | WIRE | TRIP | FRAME (Note 1) | CKT NO | A B C | CKT NO | FRAME (Note 1) | TRIP | WIRE | LOAD SERVED | LOAD KVA |
|---|---|---|---|---|---|---|---|---|---|---|---|---|
| 1.00 | EXTG EXHAUST FAN | EXTG | 20 | | 1 | | 2 | | 20 | EXTG | EXTG LIGHTS | 1.00 |
| 1.50 | EXTG LIGHTS | EXTG | 20 | | 3 | | 4 | | 20 | EXTG | EXTG EXT. LIGHTS | 1.00 |
| 1.50 | EXTG LIGHTS | EXTG | 20 | | 5 | | 6 | | 20 | EXTG | EXTG EXT. LIGHTS | 1.00 |
| 2.00 | EXTG EXHAUST FAN | EXTG | 20 | | 7 | | 8 | | 20 | EXTG | EXTG TRUCK EXHAUST SYS. | 2.50 |
| 2.00 | | EXTG | | | 9 | | 10 | | | EXTG | | 2.50 |
| 2.00 | | EXTG | | | 11 | | 12 | | | EXTG | | 2.50 |
| 9.00 | EXTG AIR COMPRESSOR | EXTG | 60 | | 13 | | 14 | | 60 | EXTG | EXTG AIR COMPRESSOR | 9.00 |
| 9.00 | | EXTG | | | 15 | | 16 | | | EXTG | | 9.00 |
| 9.00 | | EXTG | | | 17 | | 18 | | | EXTG | | 9.00 |
| 1.00 | EXTG NIGHT LIGHTS/EXITS | EXTG | 20 | | 19 | | 20 | - | - | - | SPACE ONLY | 0.00 |
| 0.00 | SPARE | - | 20 | | 21 | | 22 | - | - | - | SPACE ONLY | 0.00 |
| 0.00 | SPARE | - | 20 | | 23 | | 24 | - | - | - | SPACE ONLY | 0.00 |
| ***1.13*** | ***NEW EXHAUST FAN 'EF-1'*** | ***12*** | ***15*** | | 25 | | 26 | - | - | - | SPACE ONLY | 0.00 |
| 0.00 | SPACE ONLY | - | - | | 27 | | 28 | - | - | - | SPACE ONLY | 0.00 |
| 0.00 | SPACE ONLY | - | - | | 29 | | 30 | - | - | - | SPACE ONLY | 0.00 |
| 39.1 | | | | | SUB-TOTALS | | | | | | | 37.5 |

| | LOAD (KVA) | Conn. | D.F. | Dmd |
|---|---|---|---|---|
| | LIGHTS | 7.0 | 1.25 | 8.8 |
| | HEATING | 0.0 | 1.00 | 0.0 |
| | COOLING | 0.0 | 1.00 | 0.0 |
| | VENTILATION | 15.6 | 1.00 | 15.6 |
| | MOTORS | 54.0 | 1.00 | 54.0 |
| | KITCHEN | 0.0 | 0.65 | 0.0 |
| | REC. (1st 10kVA) | 0.0 | 1.00 | 0.0 |
| | REC. (>10kVA) | 0.0 | 0.50 | 0.0 |
| | WATER HEATER | 0.0 | 1.00 | 0.0 |
| | MISC. | 0.0 | 1.00 | 0.0 |
| | SPARE | 0.0 | 1.00 | 0.0 |
| | TOTAL (KVA) | 76.6 | | 78.4 |

| TOTAL LOAD PER PHASE: | | |
|---|---|---|
| CONNECTED | | |
| A = | 26.6 KVA | 96.1 A |
| B = | 25.0 KVA | 90.2 A |
| C = | 25.0 KVA | 90.2 A |
| DEMAND | | |
| A = | 27.1 KVA | 97.9 A |
| B = | 25.6 KVA | 92.5 A |
| C = | 25.6 KVA | 92.5 A |
| DEMAND @ 100% | | |
| A = | 27.1 KVA | 97.9 A |
| B = | 25.6 KVA | 92.5 A |
| C = | 25.6 KVA | 92.5 A |

NOTES:
1. BREAKER FRAME SHALL BE AS REQ'D PER PANEL A.I.C RATING.
2. SHALL BE FULLY RATED - SERIES RATINGS NOT ALLOWED.
3. PROVIDE TYPED, UP-TO-DATE CIRCUIT DIRECTORY.
4. ***BOLD/ITALICIZED INDICATES NEW WORK.***

## EXISTING PANEL: RP6

EATON MFGR

VOLTAGE: 120 / 208 — 3 PHASE — 4 WIRE — EXTG TYPE

MOUNTING: SURFACE — 175 AMP — MAIN CIRCUIT BREAKER — 10,000 AIC

| LOAD KVA | LOAD SERVED | WIRE | TRIP | FRAME (Note 1) | CKT NO | A B C | CKT NO | FRAME (Note 1) | TRIP | WIRE | LOAD SERVED | LOAD KVA |
|---|---|---|---|---|---|---|---|---|---|---|---|---|
| 1.00 | EXTG EXT. RCPTS | EXTG | 30 | | 1 | | 2 | | 20 | EXTG | EXTG DOOR MOTOR | 1.13 |
| 1.00 | EXTG RCPTS | EXTG | 20 | | 3 | | 4 | | 20 | EXTG | EXTG DOOR MOTOR | 1.13 |
| 1.00 | EXTG RCPTS | EXTG | 20 | | 5 | | 6 | | 20 | EXTG | EXTG DOOR MOTOR | 1.13 |
| 1.00 | EXTG RCPTS | EXTG | 20 | | 7 | | 8 | | 20 | EXTG | EXTG DOOR MOTOR | 1.13 |
| 1.00 | EXTG EXT. RCPTS | EXTG | 20 | | 9 | | 10 | | 20 | EXTG | EXTG DOOR MOTOR | 1.13 |
| 1.00 | EXTG CORD REEL | EXTG | 20 | | 11 | | 12 | | 20 | EXTG | EXTG DOOR MOTOR | 1.13 |
| 1.00 | EXTG CORD REEL | EXTG | 20 | | 13 | | 14 | | 20 | EXTG | EXTG ICE MACHINE | 0.80 |
| 1.00 | EXTG CORD REEL | EXTG | 20 | | 15 | | 16 | | 20 | ***12*** | ***NEW CORD REELS (NOTE 5)*** | ***1.00*** |
| 1.00 | EXTG CORD REEL | EXTG | 20 | | 17 | | 18 | | 20 | EXTG | EXTG DOOR MOTOR | 1.13 |
| 1.00 | EXTG RCPTS | EXTG | 20 | | 19 | | 20 | | 20 | EXTG | EXTG UNIT HEATER | 0.46 |
| 1.13 | EXTG DOOR MOTOR | EXTG | 20 | | 21 | | 22 | | 20 | EXTG | EXTG UNIT HEATER | 0.46 |
| 1.13 | EXTG DOOR MOTOR | EXTG | 20 | | 23 | | 24 | | 20 | ***12*** | ***NEW CORD REEL (NOTE 5)*** | ***0.50*** |
| ***0.46*** | ***NEW UNIT HEATER UH-14*** | ***12*** | 20 | | 25 | | 26 | | 20 | EXTG | EXTG MASTER OH DOOR CNTLS | 0.40 |
| 1.13 | EXTG DOOR MOTOR | EXTG | 20 | | 27 | | 28 | | 60 | EXTG | EXTG DRYER | 4.00 |
| 1.13 | EXTG DOOR MOTOR | EXTG | 20 | | 29 | | 30 | | | EXTG | | 4.00 |
| 1.00 | EXTG CORD REEL | EXTG | 20 | | 31 | | 32 | | | EXTG | | 4.00 |
| 1.00 | EXTG CORD REEL | EXTG | 30 | | 33 | | 34 | | 20 | EXTG | EXTG RCPTS | 1.00 |
| 1.00 | EXTG RCPTS | EXTG | 20 | | 35 | | 36 | | 20 | EXTG | EXTG SOLAR BLDG | 0.50 |
| 1.00 | EXTG EXT. RCPTS | EXTG | 20 | | 37 | | 38 | | 15 | EXTG | EXTG SOLAR BLDG | 0.50 |
| 5.00 | EXTG GENERATOR POWER | EXTG | 100 | | 39 | | 40 | | 50 | EXTG | EXTG SHORE POWER | 3.00 |
| 5.00 | | EXTG | | | 41 | | 42 | | | EXTG | | 3.00 |
| 29.0 | | | | | SUB-TOTALS | | | | | | | 31.5 |

| | LOAD (KVA) | Conn. | D.F. | Dmd |
|---|---|---|---|---|
| | LIGHTS | 0.0 | 1.25 | 0.0 |
| | HEATING | 1.4 | 1.00 | 1.4 |
| | COOLING | 0.0 | 1.00 | 0.0 |
| | VENTILATION | 0.0 | 1.00 | 0.0 |
| | MOTORS | 12.4 | 1.00 | 12.4 |
| | KITCHEN | 0.0 | 0.65 | 0.0 |
| | REC. (1st 10kVA) | 10.0 | 1.00 | 10.0 |
| | REC. (>10kVA) | 11.0 | 0.50 | 5.5 |
| | WATER HEATER | 0.0 | 1.00 | 0.0 |
| | MISC. | 25.7 | 1.00 | 25.7 |
| | SPARE | 0.0 | 1.00 | 0.0 |
| | TOTAL (KVA) | 60.5 | | 55.0 |

| TOTAL LOAD PER PHASE: | | |
|---|---|---|
| CONNECTED | | |
| A = | 14.9 KVA | 123.9 A |
| B = | 23.0 KVA | 191.4 A |
| C = | 22.7 KVA | 188.6 A |
| DEMAND | | |
| A = | 13.3 KVA | 110.8 A |
| B = | 20.9 KVA | 173.9 A |
| C = | 20.8 KVA | 173.3 A |
| DEMAND @ 100% | | |
| A = | 13.3 KVA | 110.8 A |
| B = | 20.9 KVA | 173.9 A |
| C = | 20.8 KVA | 173.3 A |

NOTES:
1. BREAKER FRAME SHALL BE AS REQ'D PER PANEL A.I.C RATING.
2. SHALL BE FULLY RATED - SERIES RATINGS NOT ALLOWED.
3. PROVIDE TYPED, UP-TO-DATE CIRCUIT DIRECTORY.
4. ***BOLD/ITALICIZED INDICATES NEW WORK.***
5. PROVIDE CLASS A GFI (6mA.-PERSONNEL) BRKR (250' MAX).

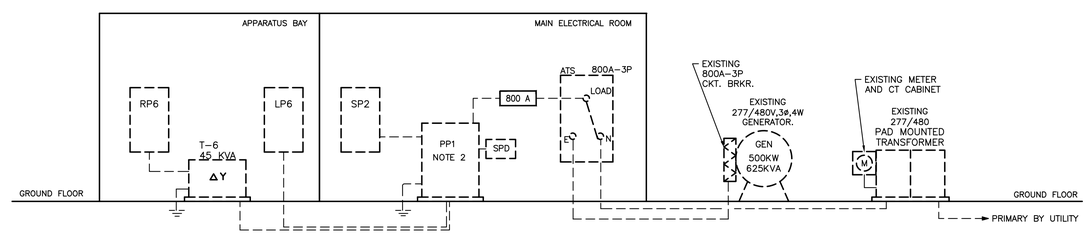


NOTES:
1. ALL ITEMS ARE EXISTING TO REMAIN. SHOWN FOR REFERENCE ONLY.
2. DISTRIBUTION PANEL 'PP1' IS A 800A, 277/480V-3ø MAIN CIRCUIT BREAKER SQUARD D 'QMB' PANEL. EXISTING PEAK LOAD ON PANEL PER UTILITY DATA AND OBSERVED CONDITIONS IS 486.6KVA. NEW LOAD ADDED TO PANEL AFTER CONSTRUCTION IS 2.79KVA. 125% OF NEW LOAD PLUS EXISTING LOAD ON PANEL IS 611.74KVA (736.1A).

1 EXISTING PARTIAL POWER RISER DIAGRAM

NO SCALE

## GENERAL NOTES

ALL NOTES APPLY TO ALL DRAWINGS AND ALL TRADES. IT IS THE RESPONSIBILITY OF ALL CONTRACTORS AND TRADES TO COORDINATE THE INSTALLATION OF THEIR WORK WITH THE INSTALLATION OF WORK BY ALL OTHER CONTRACTORS AND TRADES. THE REQUIREMENTS OF THE DRAWINGS, GENERAL REQUIREMENTS AND ALL ITEMS OF THE CONTRACT DOCUMENTS ARE EQUALLY BINDING ON ALL CONTRACTORS AND TRADES. EACH CONTRACTOR IS REQUIRED TO MAINTAIN FULL SETS OF THE CONTRACT DOCUMENTS FOR HIS EMPLOYEES USE ON THE PROJECT TO ASSURE THAT ALL WORK IS PROPERLY COORDINATED AND INSTALLED WITH THE WORK OF OTHER CONTRACTORS AND TRADES.

WHENEVER THERE ARE DISCREPANCIES BETWEEN DRAWINGS, OR BETWEEN THE DRAWINGS AND SPECIFICATIONS, OR CONFLICTS WITHIN THE SPECIFICATIONS AND/OR DRAWINGS, AND SUCH DISCREPANCY IS NOT CALLED TO THE ARCHITECT'S ATTENTION IN TIME TO PERMIT CLARIFICATION BY ADDENDUM, THE CONTRACTOR SHALL BASE HIS BID UPON PROVIDING THE BETTER QUALITY OR GREATER OF WORK OR MATERIAL CALLED FOR, SHALL SUBMIT A WRITTEN STATEMENT WITH HIS PROPOSAL NOTING SUCH DISCREPANCIES, AND SHALL SO FURNISH AND INSTALL SUCH BETTER QUALITY OR GREATER QUANTITY UNLESS OTHERWISE ORDERED IN WRITING.

Project No.
1667

Date:
11/12/2020
Drawn by:
MCH
Checked by:
MKG
Revisions

© STEWART-COOPER-NEWELL ARCHITECTS, P.A.

THIS DRAWING IS THE PROPERTY OF STEWART-COOPER-NEWELL ARCHITECTS, P.A. AND IS PROTECTED BY COPYRIGHT LAWS. THIS DRAWING MAY NOT BE REPRODUCED, PUBLISHED OR USED IN ANY WAY WITHOUT THE WRITTEN PERMISSION OF STEWART-COOPER-NEWELL ARCHITECTS, P.A.

optima engineering
150 Fayetteville St., Suite 520, Raleigh, NC 27601
1507 South Tryon St., Suite 300, Charlotte NC 28203
Phone: 919-926-2200 • www.optimaengineering.com
North Carolina License Number C-0814

Stewart·Cooper·Newell Architects
719 East Second Avenue
Gastonia, NC 28054
Phone: 704.865.6311
Fax: 704.865.0046
www.scn-architects.com
1.800.671.0621

NORTH CAROLINA PROFESSIONAL SEAL 048210 ENGINEER MORGAN K. GUNTER
11/12/2020

BAY EXPANSION FOR
GREENVILLE FIRE RESCUE #1
GREENVILLE, NC

ELECTRICAL SCHEDULES & RISER DIAGRAM

Sheet No.
10.51

THIS DRAWING IS AN INSTRUMENT OF SERVICE. THE DRAWING AND THE INFORMATION THEREON IS THE PROPERTY OF OPTIMA ENGINEERING, P.A. ANY REPRODUCTION, ALTERATION, OR USE FOR OTHER THAN THE INTENDED PROJECT, WITHOUT THE WRITTEN CONSENT OF OPTIMA ENGINEERING, P.A. IS EXPRESSLY FORBIDDEN. COPYRIGHT © OPTIMA ENGINEERING P.A. 2020, ALL RIGHTS RESERVED.